A C C E S S I B I L I T Y R E F E R E N C E M A N U A L

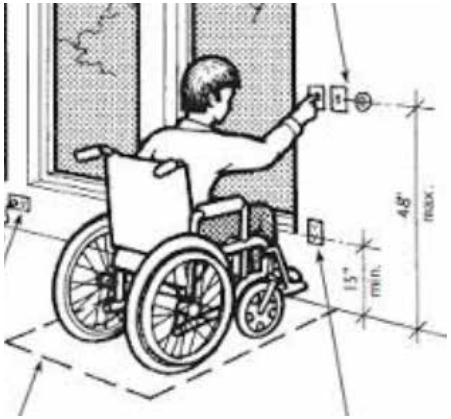

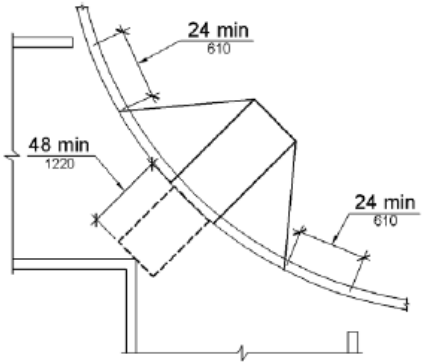

A Reference Guide For Building Professionals In Virginia

This project was jointly developed by the Virginia Board for People with Disabilities and the Virginia Association of Centers for Independent Living.

68% of the funding for this product was provided by the Virginia Board for People with Disabilities under the federal Developmental Disabilities and Bill of Rights Act. For more information on the Board, please contact: Virginia Board for People with Disabilities, 1100 Bank Street, 7th Floor, Richmond, VA 23219, (800) 846-4464, or visit the Board's website at www.vaboard.org.

Publication Date: February 5, 2015

Contents

Introduction: Project ABLE	p. 4
Code Resources and Applications	p. 5
Building Codes vs. Civil Rights Legislation	p. 6
Fair Housing Act	p. 7
Section 1: Accessible Parking	p. 9
Section 2: Curb Ramps	p. 20
Section 3: Accessible Route	p. 26
Section 4: Ramps	p. 36
Section 5: Doors	p. 42
Section 6: Bathrooms and Toilets	p. 54
Section 7: Drinking Fountains	p. 66
Section 8: Visual Alarms	p. 74
Section 9: Light Fixtures	p. 78
Section 10: Kitchens	p. 84
Section 11: Reach Ranges	p. 98
Section 12: Elevators and Chair Lifts	p. 108
Appendix: Web Sources	p. 116

Project ABLE:
"Advocates Building Livable Environments"

In the fall of 2013 the Virginia Board for People with Disabilities awarded a grant to the Virginia Association of Centers for Independent Living to develop a resource module for building professionals and to provide training outreach to those professionals in the Commonwealth of Virginia. The effort was named: Project ABLE: "Advocates Building Livable Environments".

In the fall of 2013 and the early winter of 2014, focus groups were convened throughout the Commonwealth. Contractors, architects, local building/planning officials, and other building professionals were included in these sessions with the objective of identifying and examining the various accessible issues that the professionals face the most frequently—and to identify areas of confusion among the existing building codes and the civil rights legislation.

This reference manual has been compiled to address many of the topics evaluated at these focus groups. This manual is not intended to be all-inclusive but is rather intended to focus on the prevalent concerns that were identified during the focus group sessions.

This document is designed as an easy reference for all building professionals. The primary purpose is to clarify and organize the existing different standards of accessibility, and to illustrate their relationship to each other.

Code, Standard, and Regulatory Resources and Their Application

The three primary design/civil rights code/standards/regulations listed below are highlighted and cited throughout this manual:

- **ICC 1111.1-2009, which is used by the majority of building inspectors in the Commonwealth of Virginia**

- **Fair Housing Act Design Manual, published by the US Department of Housing and Urban Development**

- **2010 ADA Standards for Accessible Design published by the US Department of Justice**

The ICC A117.1-2009 standard was analyzed in this code comparison because it is far more detailed and provides specifics concerning accessibility standards. When reviewing plans, both the ICC A117.1-2009 and the 2012 Virginia Construction Code should be jointly used.

While these three codes/standards often prescribe similar standards of accessibility, occasionally building professionals encounter variations in their scope and emphasis. This manual is designed to identify and highlight these areas and allow the building professional to evaluate and determine the most relevant and useful code, standard, or guideline to apply in a given situation.

Building Codes Vs. Civil Rights Legislation

Most of the confusion in the application of accessibility standard derives from the basis and intent of the three relevant codes/standards. In particular, the **ICC 2009, ICC 1111.1-2009** is the referenced standard in Virginia for building code interpretations, and was developed as a building code. In contrast, both the **Fair Housing Act** and the **2010 ADA Standards for Accessible Design** were developed as civil rights legislation and consequently can supplant the building code in certain cases.

The interconnection between the standard building code and the overlaid civil rights legislation can often cause confusion and for building professionals underlines the critical importance of having a familiarity with all three codes/standards and their focus. Accessibility is a universal concern and as building professionals become more familiar with differing accessibility standards and the options they present, the more our respective communities will benefit.

Note on sources and accessibility resources:

All of the building standards listed in this manual concern new construction and additions. The Americans with Disabilities Act has guidelines in place that address the accessibility of older structures. For questions on the use of appropriate standards for assessing accessibility of structures, contact the United States Access Board at (800) 972-2253 TTY: (800) 993-2822 or the Mid-Atlantic ADA Center at (800) 949-4232 V/TTY.

Accessibility in existing buildings is also now regulated by the 2012 Virginia Rehabilitation Code. The details of implementation are still found in the ICC A117.1 document reviewed in this reference manual.

About the Fair Housing Act

The Fair Housing Act establishes requirements and guidelines intended to reduce barriers for individuals living with disabilities and to encourage the design and construction of accessible multifamily dwellings. The guidelines include seven design and construction requirements which apply to construction of multifamily dwellings containing four or more units and built for first occupancy after March 13, 1991.

The Fair Housing Act requires these seven basic requirements that must be met to comply with the access requirements of the Act:

Requirement 1: an accessible building entrance on an accessible route.
Requirement 2: accessible common and public use areas.
Requirement 3: usable doors (usable by a person in a wheelchair).
Requirement 4: accessible route into and through the dwelling unit.
Requirement 5: light switches, electrical outlets, thermostats and other environmental controls in accessible locations.
Requirement 6: reinforced walls in bathrooms for later installation of grab bars.
Requirement 7: usable kitchens and bathrooms.

"*Safe Harbor*" and the Fair Housing Act

A safe harbor is a law, accessibility standard, or building code identified by the U.S. Department of Housing and Urban Development (HUD) as consistent with the Fair Housing Act's Design and Construction Requirements. Once a specific safe harbor has been selected, designers and builders should comply with ALL of the relevant provisions in that document. The status of ***"safe harbor***" may be lost if provisions are selected from a variety of sources.

When the ICC codes are jointly used they provide a safe harbor for construction projects. Building professionals should note that the Virginia Construction Code alone does not provide a safe harbor under the Fair Housing Act.

Acceptable "Safe Harbors":

- HUD Fair Housing Accessibility Guidelines and the Supplemental Notice to Fair Housing Accessibility Guidelines
- HUD Fair Housing Act Design Manual
- ANSI A117.1 (1986) *
- CABO/ANSI A117.1 (1992) *
- ICC/ANSI A117.1 (1998) *
- ICC/ANSI A117.1 - 2003 (Accessible and Usable Buildings and Facilities)
- ICC Code Requirements for Housing Accessibility 2000 (CRHA)
- International Building Code 2000 as amended by the 2001 Supplement to the International Codes
- International Building Code 2003, with one condition
- 2006 International Building Code

* used with the Fair Housing Act, HUD's regulations, and the Guidelines

Section 1:
Accessible Parking

Frequently, no portion of a development is more important than the appropriate provision of accessible parking. A few differences among the standards reviewed exist and should be noted by building professionals.

Building professionals may inadvertently overlook some basic principles of the proper designation of accessible parking. They are:

- In a parking facility, at least one van accessible parking space must always be provided.
- Access aisles need to be entirely clear and unobstructed.
- The curb ramp transitioning from the accessible spaces to an elevated walkway should NEVER be within the area of the parking space itself. The curb ramp should always be aligned with the access aisle.

While most accessible spaces are eight feet wide and include an eight foot access aisle, the US Standards of Accessible Design recommends an eleven foot space with a five foot access aisle for van accessible spaces—although the eight foot space and access aisle standard remain an accepted exemption.

Comparison of ICC, Fair Housing, and ADA Standards

Accessible Parking	ICC A117.1-2009	Pages	Fair Housing Act Design Manual	Pages	2010 ADA Standards for Accessible Design	Section	Comments
Number and Location of Spaces	Where parking is provided, *accessible* parking spaces shall be provided in compliance with Table 1106.1, except as required by Sections 1106.2 through 1106.4. Where more than one parking facility is provided on a *site*, the number of parking spaces required to be *accessible* shall be calculated separately for each parking facility.	39, 40	When parking is provided on a residential site, accessible parking spaces on an accessible route must be provided for residents and visitors. Accessible parking spaces must meet the requirements for parking in ANSI 4.6 and be located on the shortest possible accessible circulation route to an accessible entrance.	2.20 - 2.25	The number of parking spaces required to be accessible is to be calculated separately for each parking facility; the required number is not to be based on the total number of parking spaces provided in all of the parking facilities provided on the site.	208	**Numbers do not significantly change among the standards. The Fair Housing Publication requires 2% of the total. 2010 ADA Standards requires more for non-residential.**
Configuration of Spaces	Car parking spaces shall be 96 inches (2440 mm) minimum in width. Van parking spaces shall be 132 inches (3350 mm) minimum in width.	39, 40	The Guidelines provide that a minimum of two percent of the parking spaces serving covered dwelling units be made accessible and be located on an accessible route.	2.23	Car and van parking spaces shall comply with 502. Where parking spaces are marked with lines, width measurements of parking spaces and access aisles shall be made from the centerline of the markings.	502	**ANSI requires only a five foot access aisle. 2010 ADA Standards require a 132 inch van space with an exception of 96" with 96" aisle.**

Comparison of ICC, Fair Housing, and ADA Standards

Accessible Parking	ICC A117.1-2009	Pages	Fair Housing Act Design Manual	Pages	2010 ADA Standards for Accessible Design	Section	Comments
Access Aisle and Relationship to Curb Ramp, if Provided	Car and van parking spaces shall have an adjacent access aisle complying with Section 502.4.	39, 40	Parking spaces must be wide enough to allow people using wheelchairs or mobility aids to move between cars and to enter cars or vans. Accessible parking spaces must be at least 96 inches wide and have an adjacent access aisle that is 60 inches wide. This 60-inch access aisle is regarded as a minimum.	2.20, 2.21	Access aisles serving parking spaces shall comply with 502.3. Access aisles shall adjoin an accessible route. Two parking spaces shall be permitted to share a common access aisle.	502	**The 2010 ADA parking standards require angled parking to have an access aisle on the passenger side with the aisle the entire length of the space.**
Van Accessible Spaces	Van parking spaces shall be 132 inches (3350 mm) minimum in width.	39, 40	NA	NA	Car parking spaces shall be 96 inches (2440 mm) wide minimum and van parking spaces shall be 132 inches (3350 mm) wide minimum, shall be marked to define the width, and shall have an adjacent access aisle complying with 502.3.	208.2.4	**See notes above.**

ICC A117.1-2009

Provided in Parking Facility	Accessible Parking Spaces
1 to 25	1
26 to 50	2
51 to 75	3
76 to 100	4
101 to 150	5
151 to 200	6
201 to 300	7
301 to 400	8
401 to 500	9
501 to 1000	2 percent of total
1001 and over	20, plus 1 for each 100, or fraction thereof, over 1000

Fair Housing Act Design Manual

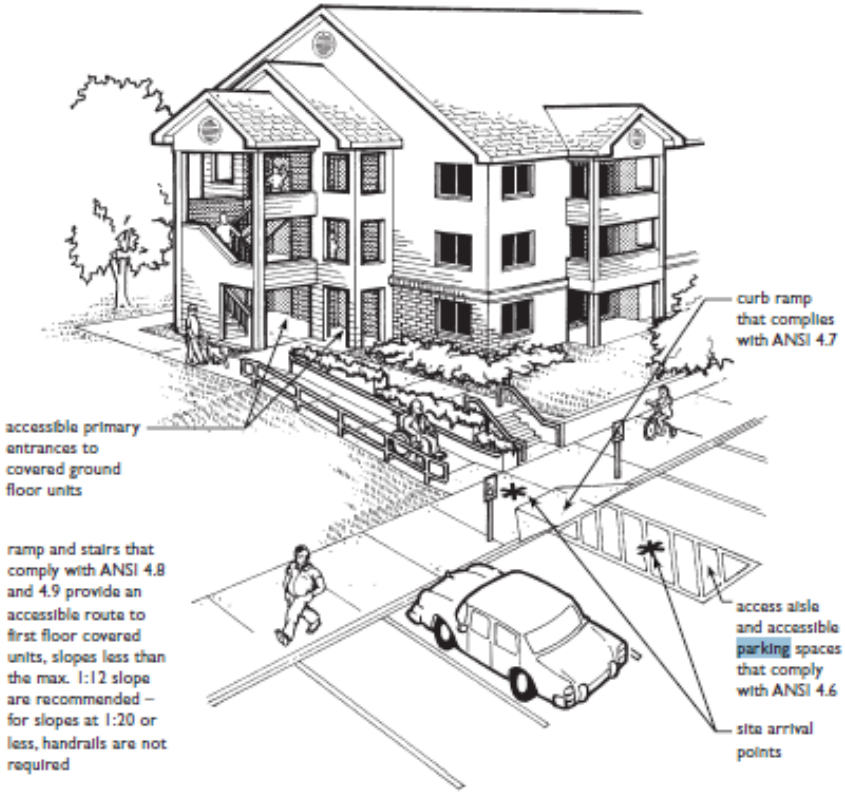

Site Grading with Combined Ramp and Stairs to Create Access to First Floor Units

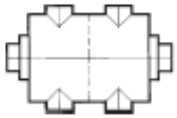

Key Plan
4 Units on Each Floor

2010 ADA Standards for Accessible Design

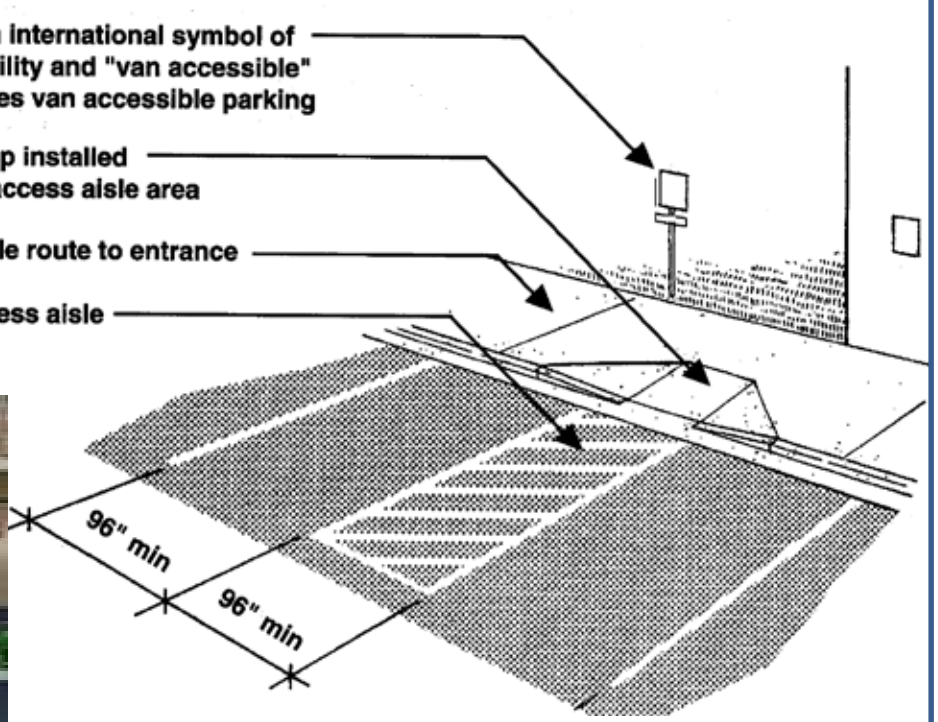

Accessible parking options are one of the most important components of an accessibility route and unfortunately are one of the most abused or neglected.

ICC A117.1-2009

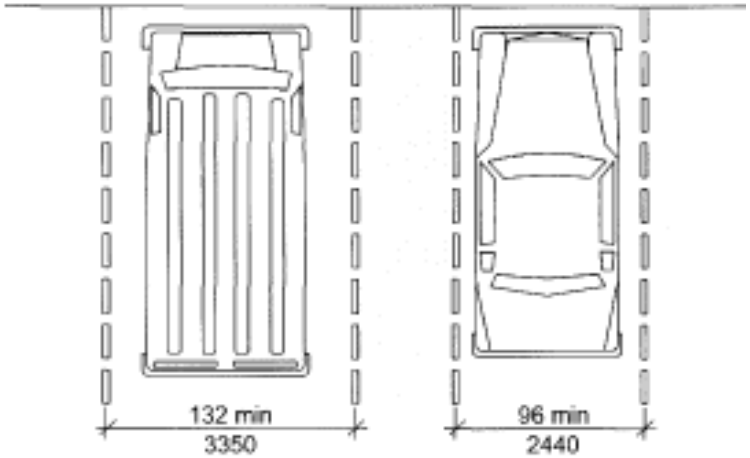

FIG. 502.2
VEHICLE PARKING SPACE SIZE

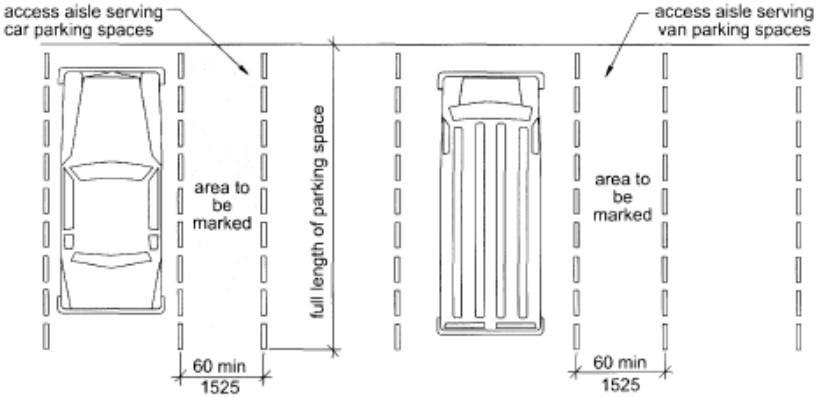

FIG. 502.4
PARKING SPACE ACCESS AISLE

Fair Housing Act Design Manual

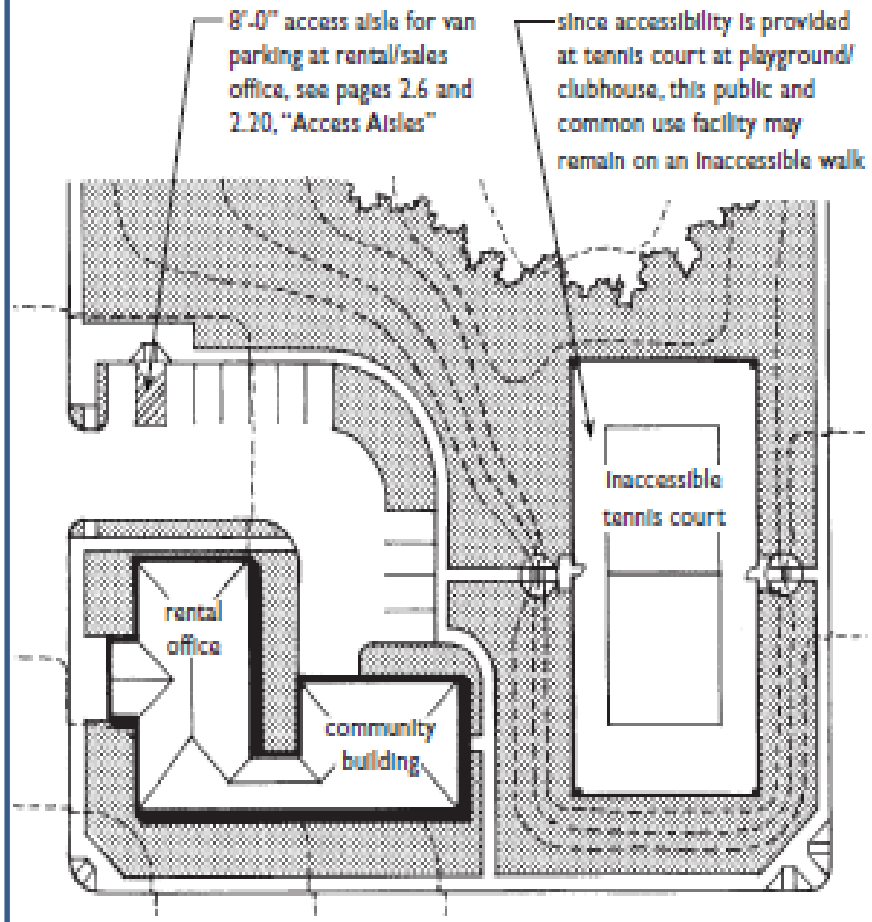

2010 ADA Standards for Accessible Design

502.2 Vehicle Spaces. Car parking spaces shall be 96 inches (2440 mm) wide minimum and van parking spaces shall be 132 inches (3350 mm) wide minimum, shall be marked to define the width, and shall have an adjacent access aisle complying with 502.3.

EXCEPTION: Van parking spaces shall be permitted to be 96 inches (2440 mm) wide minimum where the access aisle is 96 inches (2440 mm) wide minimum

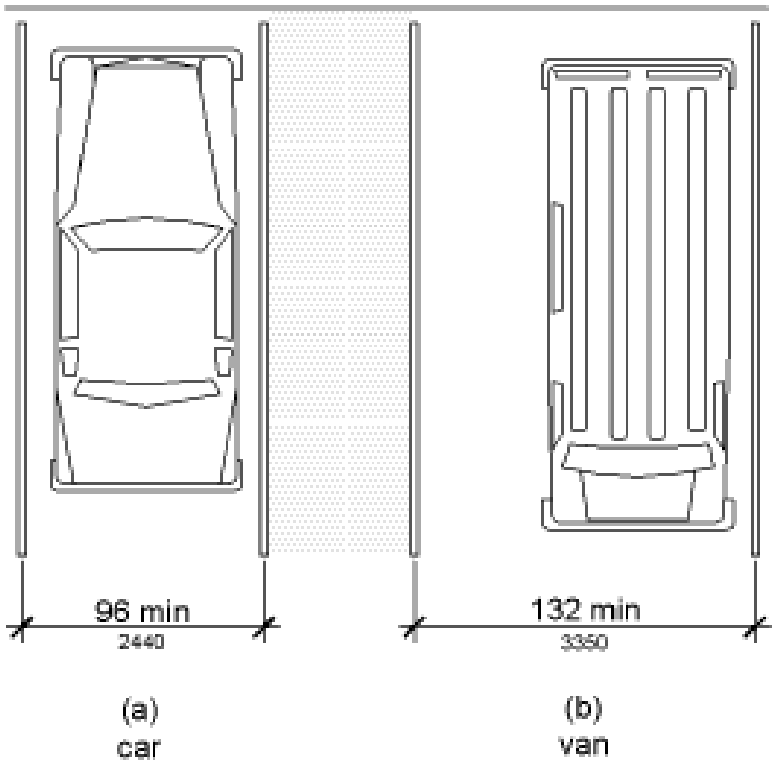

Standard accessible parking spaces are eight feet wide (96”) with a five foot (60”) access aisle. The new ADA Standards for Accessibility Design suggest an eleven foot (132”) space with a five foot aisle for van accessible spaces.

Access Aisle and Relationship to Curb Ramp

ICC A117.1-2009

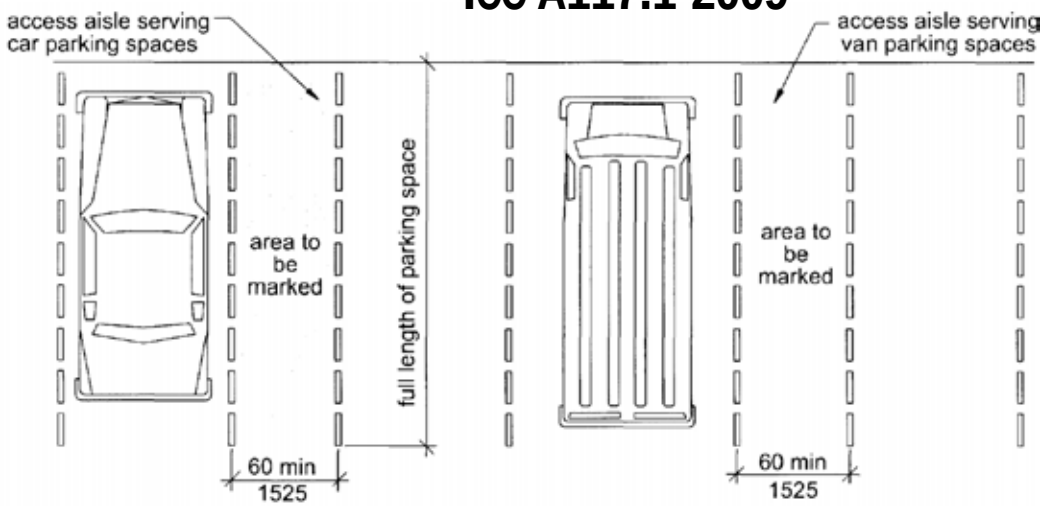

FIG. 502.4
PARKING SPACE ACCESS AISLE

Fair Housing Act Design Manual

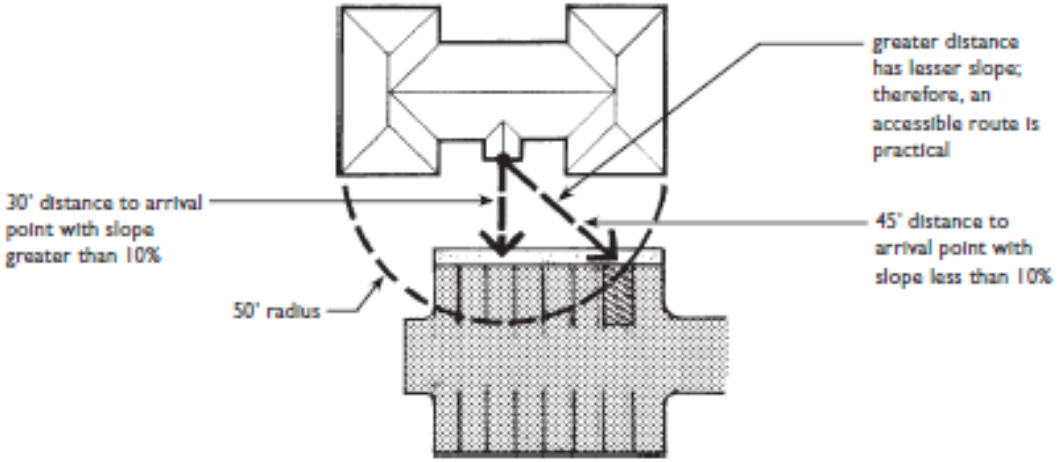

All Arrival Points within 50 Feet Must Be Considered

Access Aisle and Relationship to Curb Ramp

2010 ADA Standards for Accessible Design

Signage: international symbol of accessibility placed in front of the parking space mounted at least five feet above the ground, measured to the bottom of the sign. Van accessible spaces include the designation "van accessible".

Van Accessible Spaces: 2010 Standards—one for every six accessible spaces (1991 Standards required one for every eight)

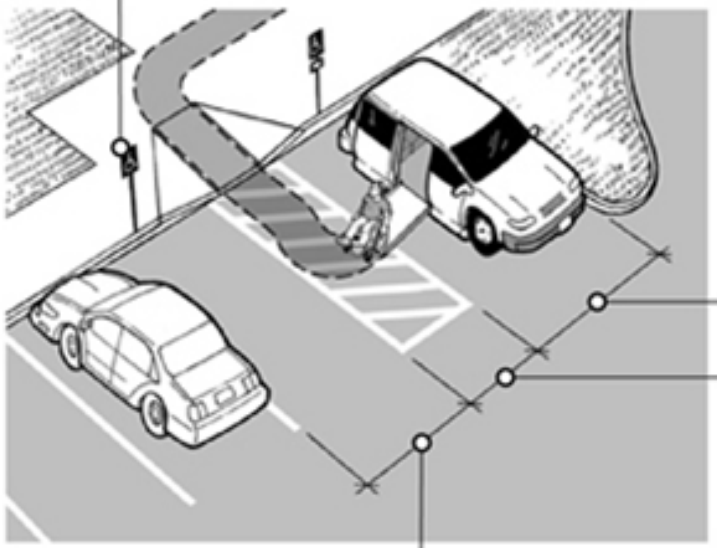

Space width for car: eight feet

Space width for van: 11 feet (although it may be eight feet wide if its access aisle is eight feet wide)

Access aisle:

Width: five feet (if aisle serves car and van spaces)

Length: full length of parking space

The access aisle and the curb ramp should never conflict with the accessible parking space and the aisle should extend the full length of the parking space.

ICC A117.1-2009

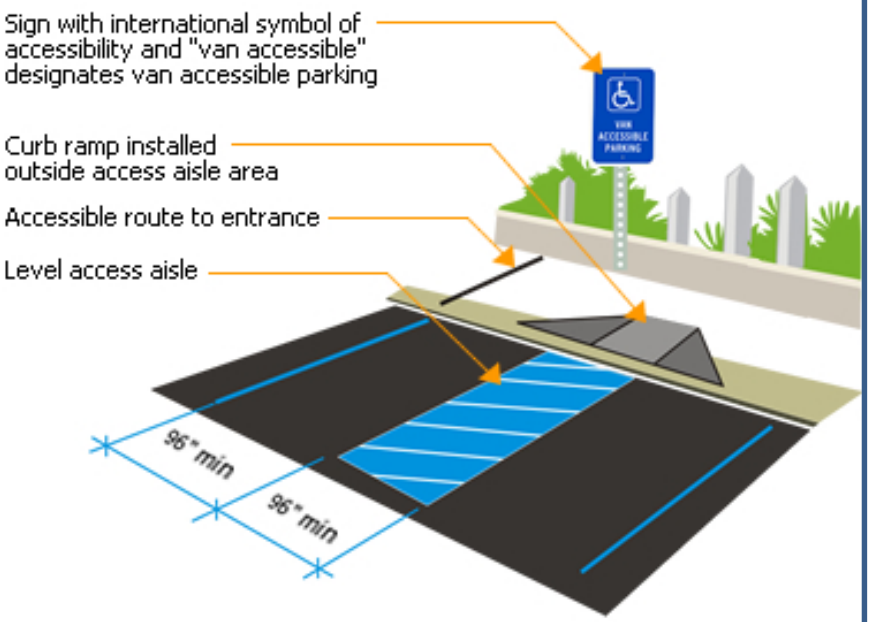

Fair Housing Act Design Manual

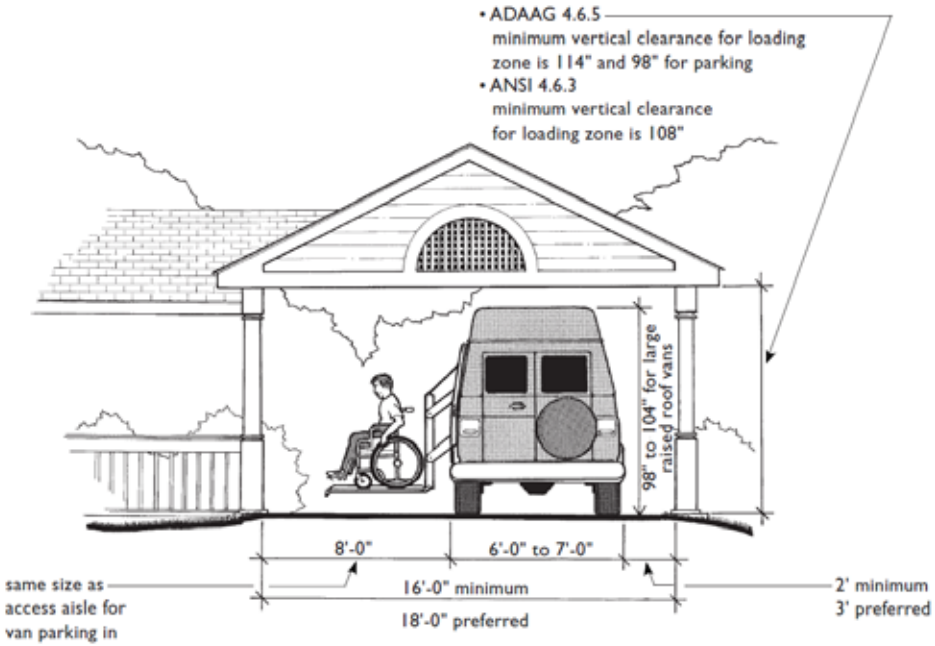

Reference Dimensions for Vertical and Horizontal Clearances for Raised Roof Van with Lift Extended

2010 ADA Standards for Accessible Design

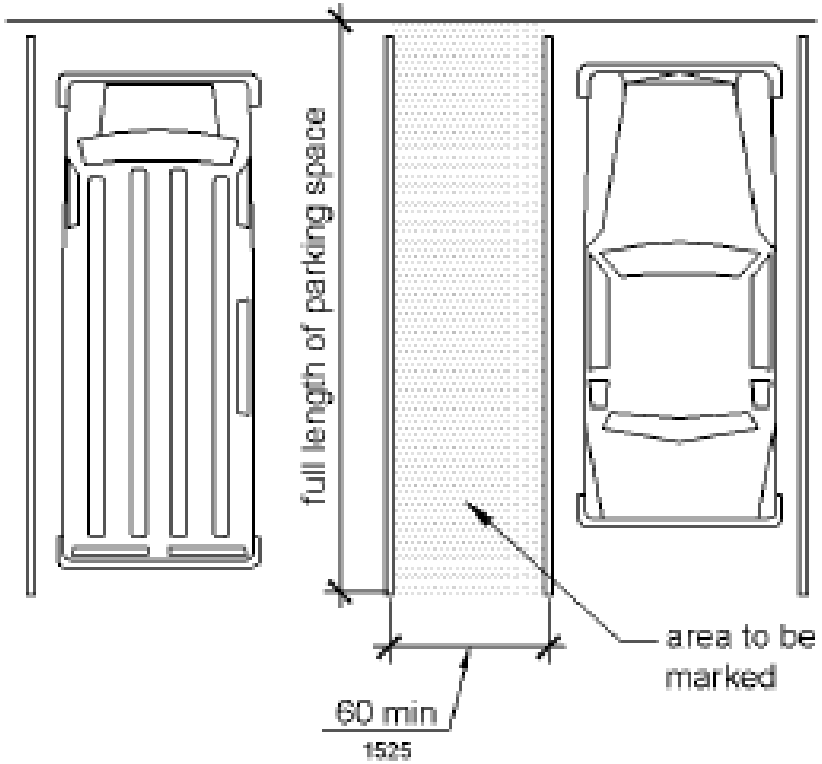

Access aisles serving car and van parking spaces are required to be a minimum width of 60 inches (1525 mm) and the access aisle should extend the full length of the parking spaces they serve. The access aisles should be marked so as to discourage parking in them.

Section 2:

Curb Ramps

Nearly every building project will necessitate the use of curb ramps. Whether located on a corner or along a pedestrian route, curb ramps are essential in providing access between a parking area and an elevated surface route. After years of study, the standards for curb ramps have been developed and refined by the U.S Access Board.

While major differences among the three accessibility standards reviewed in this manual are not present, the 2010 ADA Standards for Accessible Design provides the most detailed guidance, including the following instruction: *newly constructed or altered streets, roads, and highways must contain curb ramps or other sloped areas at any intersection having curbs or other barriers to entry from a street level pedestrian walkway (Section 35.151 of 28 CFR Part 35).*

The location and slope of curb ramps is detailed in this section of the reference manual along with the necessity of truncated domes. All building professionals should be familiar with these standards.

The U.S Access Board is now developing more detailed guidelines on curb ramps. These guidelines have been in review status for the last few years and are expected to be approved in 2015.

Comparison of ICC, Fair Housing, and ADA Standards

Curb Ramps	ICC A117.1-2009	Pages	Fair Housing Act Design Manual	Pages	2010 ADA Standards for Accessible Design	Section	Comments
Location	Curb ramps and the flared sides of curb ramps shall be located so they do not project into vehicular traffic lanes, parking spaces, or parking access aisles. Curb ramps at marked crossings shall be wholly contained within the markings, excluding any flared sides.	24	References ANSI 4.7.	1.16	Curb ramps and the flared sides of curb ramps shall be located so that they do not project into vehicular traffic lanes, parking spaces, or parking access aisles. Curb ramps at marked crossings shall be wholly contained within the markings, excluding any flared sides.	406.5	**No distinction exists between the three standards, but in the PROWAG, perpendicular curb ramps are required unless constraints prevent.**
Slope	Counter slopes of adjoining gutters and road surfaces immediately adjacent to the curb ramp shall not be steeper than 1:20. The adjacent surfaces at transitions at curb ramps to walks, gutters and streets shall be at the same level.	24	References ANSI 4.7.	2.20 - 2.21	Counter slopes of adjoining gutters and road surfaces immediately adjacent to the curb ramp shall not be steeper than 1:20. The adjacent surfaces at transitions at curb ramps to walks, gutters, and streets shall be at the same level.	406.2, 406.3	**Requirements are the same.**
Truncated Domes	Detectable warnings shall be 24 inches (610 mm) minimum in depth in the direction of travel. The detectable warning shall extend the full width of the curb ramp or flush surface. The detectable warning shall be located so the edge nearest the curb line is 6 inches (150 mm) minimum and 8 inches (205 mm) maximum from the curb line.	26	References ANSI 4.7.	2.13	Truncated domes in a detectable warning surface shall have a center-to-center spacing of 1.6 inches (41 mm) minimum and 2.4 inches (61 mm) maximum, and a base-to-base spacing of 0.65 inch (17 mm) minimum, measured between the most adjacent domes on a square grid.	705	**The Fair Housing Publication refers to ANSI domes. The 2010 ADA guidelines are more specific.**

ICC A117.1-2009

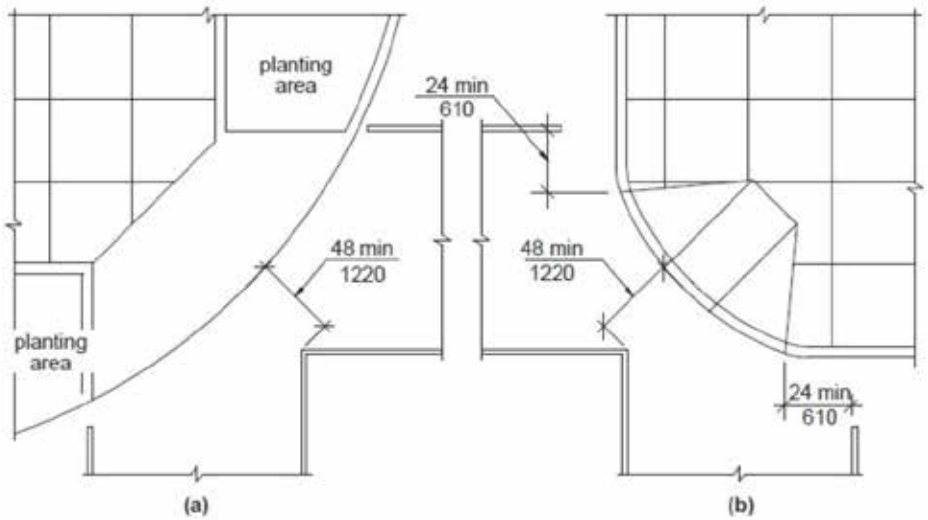

FIG. 406.10
DIAGONAL CURB RAMPS

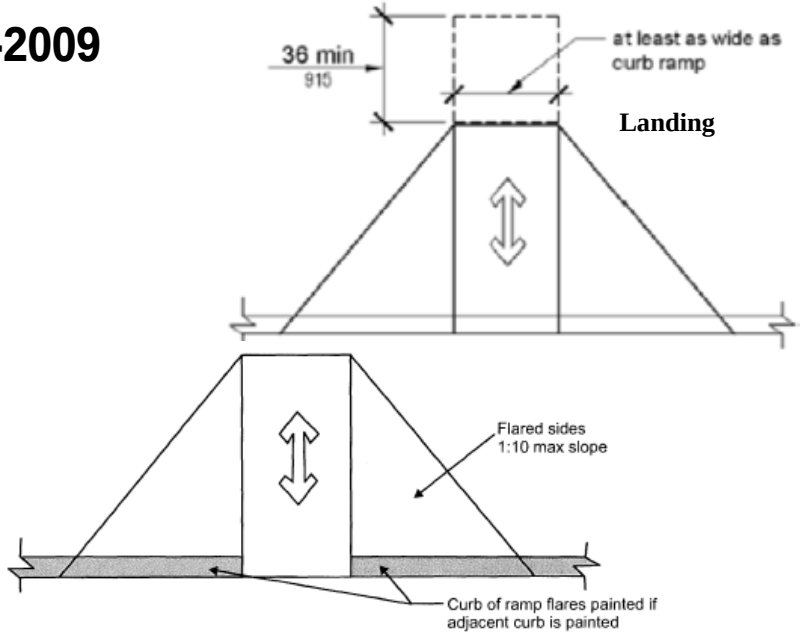

FIG. 406.3
SIDES OF CURB RAMPS

Fair Housing Act Design Manual

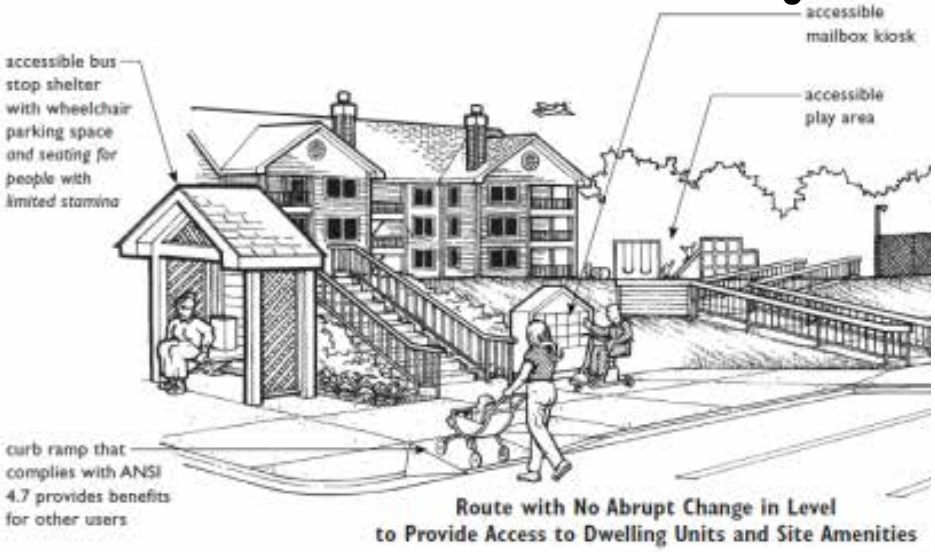

Route with No Abrupt Change in Level to Provide Access to Dwelling Units and Site Amenities

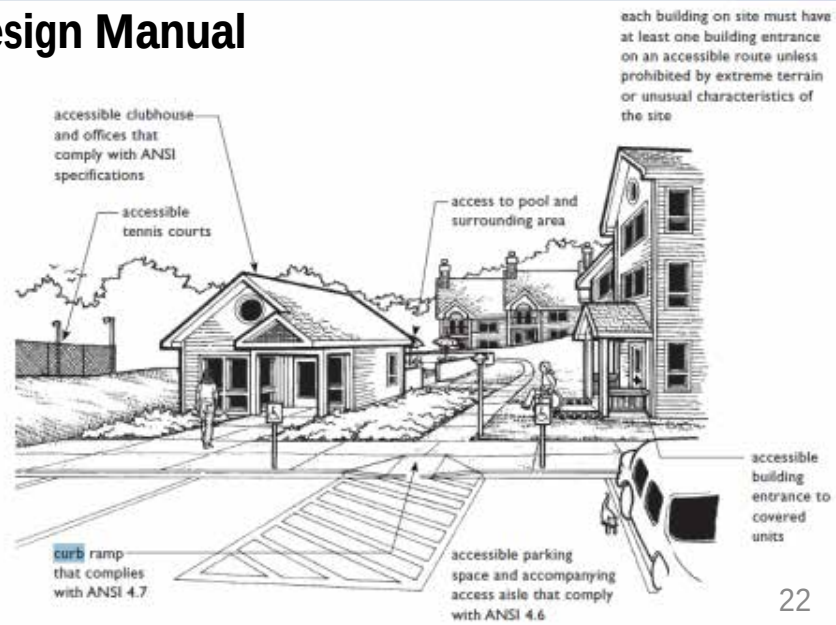

2010 ADA Standards for Accessible Design

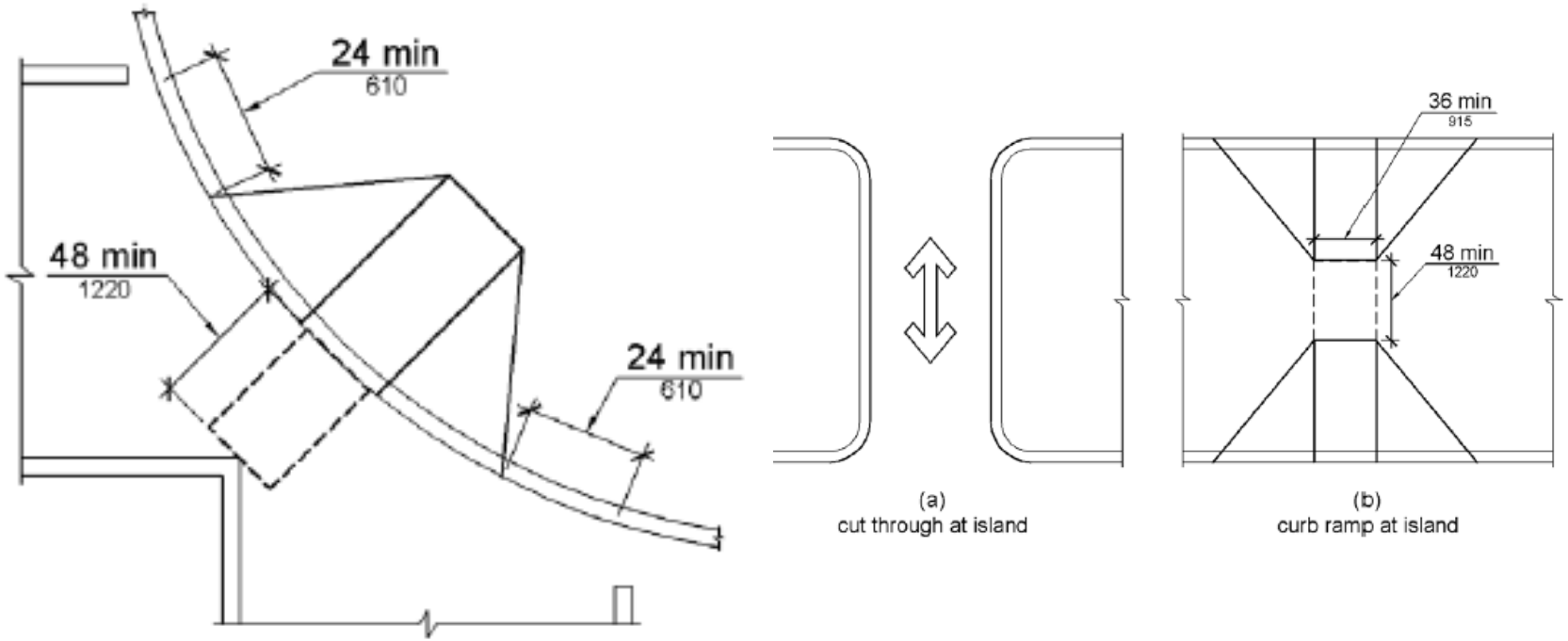

The federal government has been reviewing proposed right-of-way guidelines for the last few years. The details provided in these three codes/standards are limited, but do provide basic curb ramp design.

ICC A117.1-2009

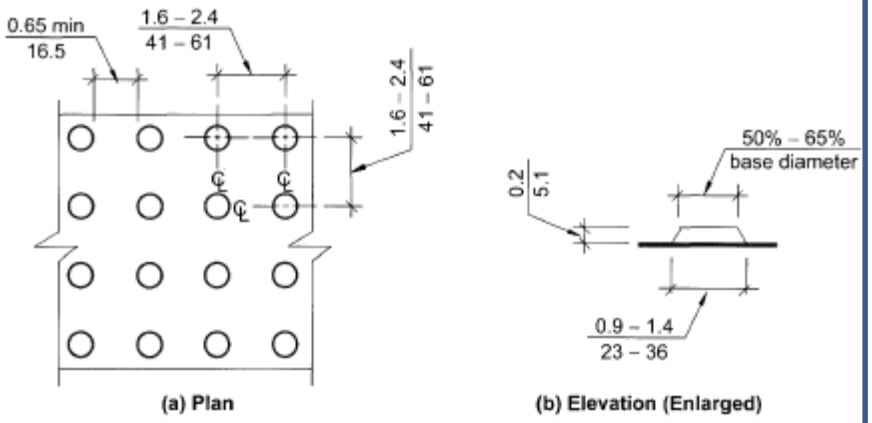

FIG. 705.5
TRUNCATED DOME SIZE AND SPACING

Detectable warnings for pedestrian curb cuts became officially required in 2001.

Fair Housing Act Design Manual

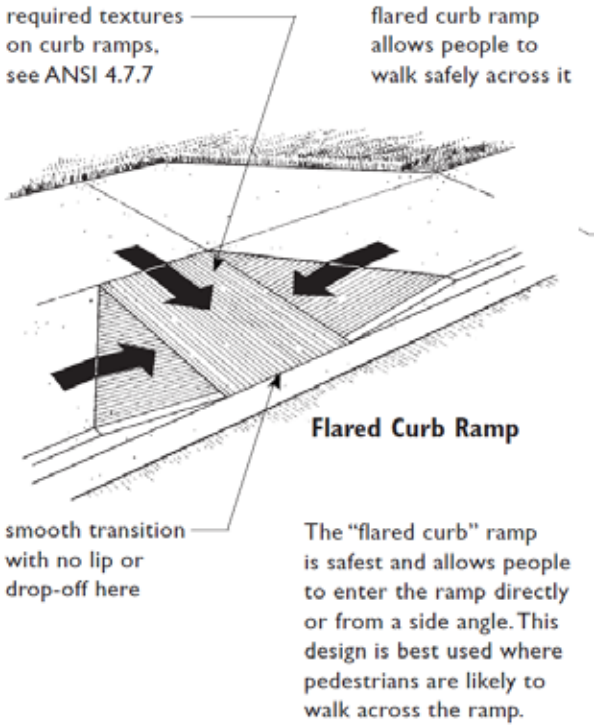

2010 ADA Standards for Accessible Design

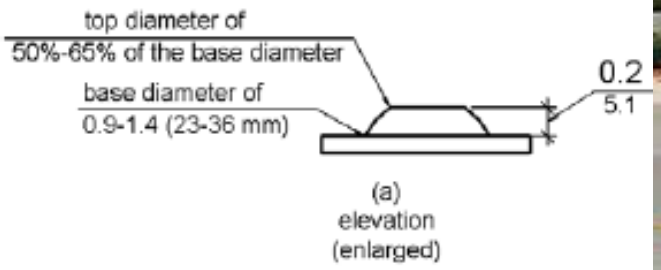

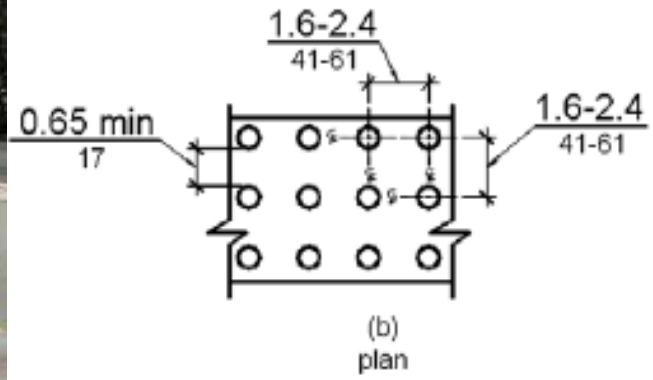

Truncated domes provide tactile warnings for people with sight impairment. They are a very important part of an accessible route, especially in proximity to automobile traffic.

Section 3:
Accessible Routes

Nearly every person with a mobility impairment faces the prospect that they will encounter physical obstacles as they try to go about their daily lives. Whether simply navigating within their homes or performing tasks around town or on their jobs, an accessible route is an critical element affecting their travels.

An accessible route, as the reference manual demonstrates, includes a number of essential components. The surface, the width of the path, and the presence of proper signage provide a person with limited mobility a greater chance for independence and success in their everyday lives.

When designing and/or inspecting building projects, special attention should be given to establish a route that adheres to the accessibility guidelines. The key portions of a construction project need to be connected with an accessible route. Inspectors and plan reviewers should be prepared to require building professionals to identify an accessible route on building drawings, which can usually be accomplished with simple arrow indicators or shadings on a drawing.

Comparison of ICC, Fair Housing, and ADA Standards

Accessible Routes	ICC A117.1-2009	Pages	Fair Housing Act Design Manual	Pages	2010 ADA Standards for Accessible Design	Section	Comments
Proper Signage Identifying Route Location	Accessible signs shall comply with Section 703. Tactile signs shall contain both raised characters and braille. Where signs with both visual and raised characters are required, either one sign with both visual and raised characters, or two separate signs, one with visual, and one with raised characters, shall be provided.	65-86	NA	NA	NA	NA	**Little guidance on proper signage location for accessible routes is provided among the codes/standards.**

Comparison of ICC, Fair Housing, and ADA Standards

Accessible Routes	ICC A117.1-2009	Pages	Fair Housing Act Design Manual	Pages	2010 ADA Standards for Accessible Design	Section	Comments
Surface Requirements	Floor surfaces shall comply with Section 302. Floor surfaces shall be stable, firm, and slip resistant.	15	NA	NA	The floor or ground surface of wheelchair spaces shall be stable and firm.	302.1	**All requirements require that surfaces be stable, firm, and slip resistant.**

Comparison of ICC, Fair Housing, and ADA Standards

Accessible Routes	ICC A117.1-2009	Pages	Fair Housing Act Design Manual	Pages	2010 ADA Standards for Accessible Design	Section	Comments
Proper Width and Slope	The running slope of walking surfaces shall not be steeper than 1 :20. The cross slope of a walking surface shall not be steeper than 1 :48.	15	An accessible route is a path that is at least 36 inches wide, smooth, as level as possible, and without hazards or obstructions. If no portion of the finished grade of a route between two buildings that contain only dwelling units exceeds 8.33% (1 in 12), it is recommended that the route be made accessible. Such voluntary accessible walks must meet the same specifications as an accessible route except that handrails, commonly required on accessible routes when their slope exceeds 5% (1 in 20), are not required.	1.8 - 1.58	Accessible routes shall consist of one or more of the following components: walking surfaces with a running slope not steeper than 1:20, doorways, ramps, curb ramps excluding the flared sides, elevators, and platform lifts. All components of an accessible route shall comply with the applicable requirements of Chapter 4.	402	**Standards are basically the same.**

Proper Signage
Identifying Route Locations

ICC A117.1-2009

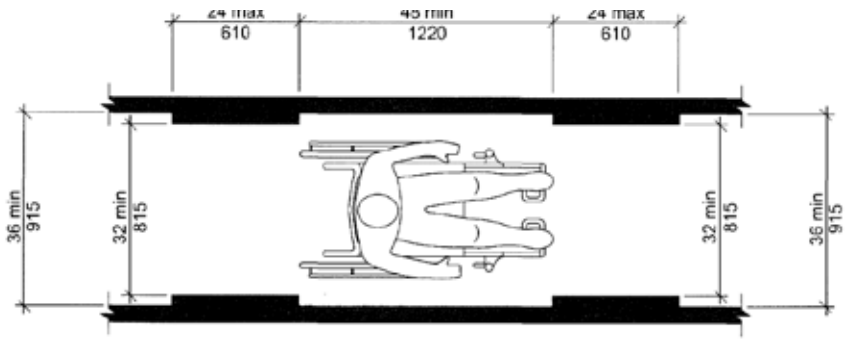

FIG. 403.5
CLEAR WIDTH OF AN ACCESSIBLE ROUTE

The path of travel shown above should be properly indicated and marked with appropriate signage. In addition, the path should be clear of obstructions.

Fair Housing Act Design Manual

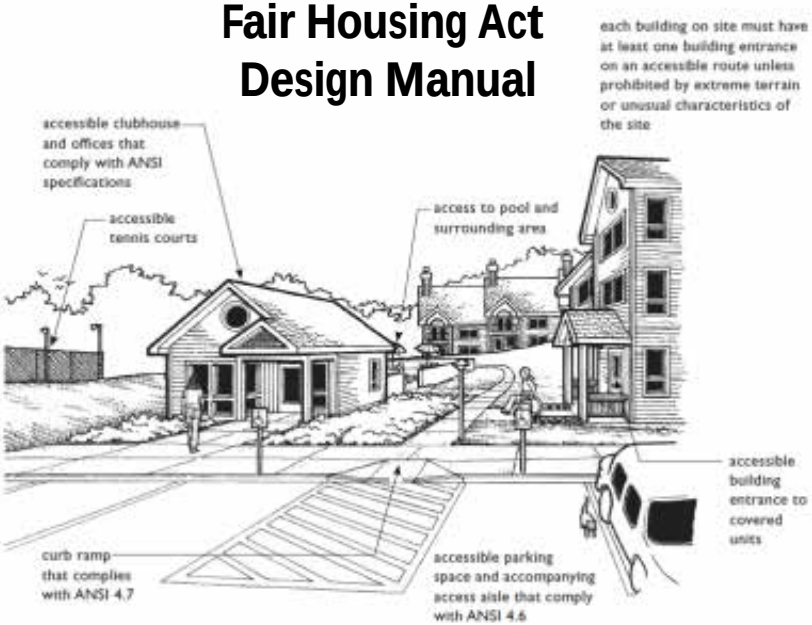

Route with No Abrupt Change in Level to Provide Access to Dwelling Units and Site Amenities

Proper Signage
Identifying Route Locations

2010 ADA Standards for Accessible Design

Too often people with mobility limitations find themselves traveling a needless distance due to the lack of proper signage. The designation of an accessible route gives a person with mobility impairment proper direction.

ICC A117.1-2009

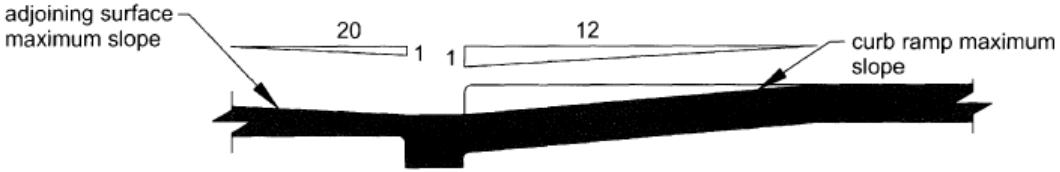

FIG. 406.2
COUNTER SLOPE OF SURFACES ADJACENT TO CURB RAMPS

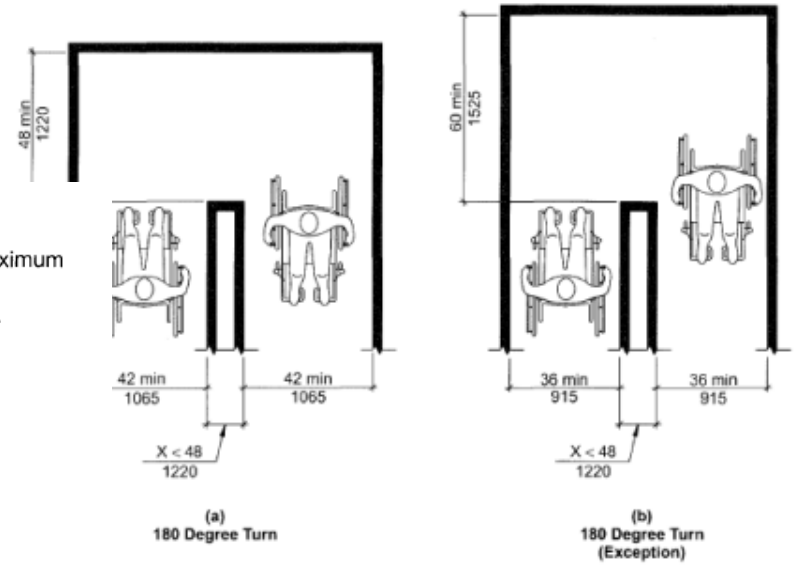

FIG. 403.5.1
CLEAR WIDTH AT 180° TURN

Fair Housing Act Design Manual

handrail extensions for support and guidance

stairs nearby or within sight of accessible route must comply with ANSI 4.9

accessible route maintained between levels with ANSI complying ramp, maximum slope 1:12

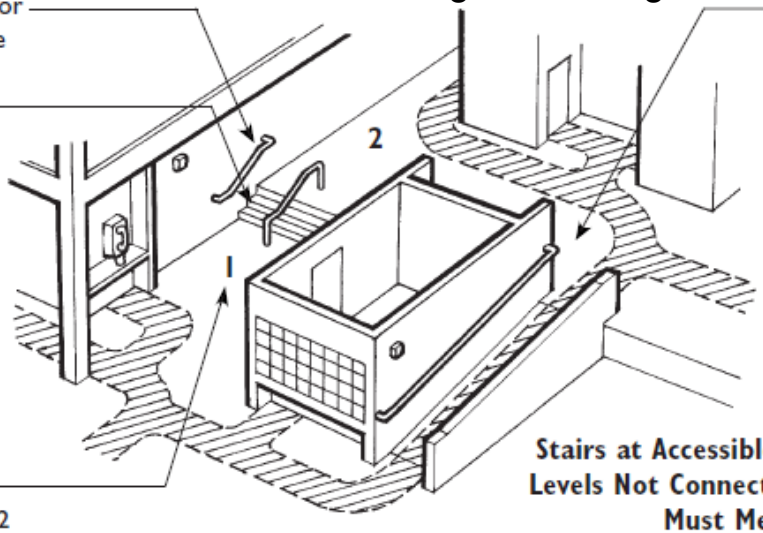

no elevator goes between level 1 and 2

Stairs at Accessible Routes Between Levels Not Connected By an Elevator Must Meet ANSI

2010 ADA Standards for Accessible Design

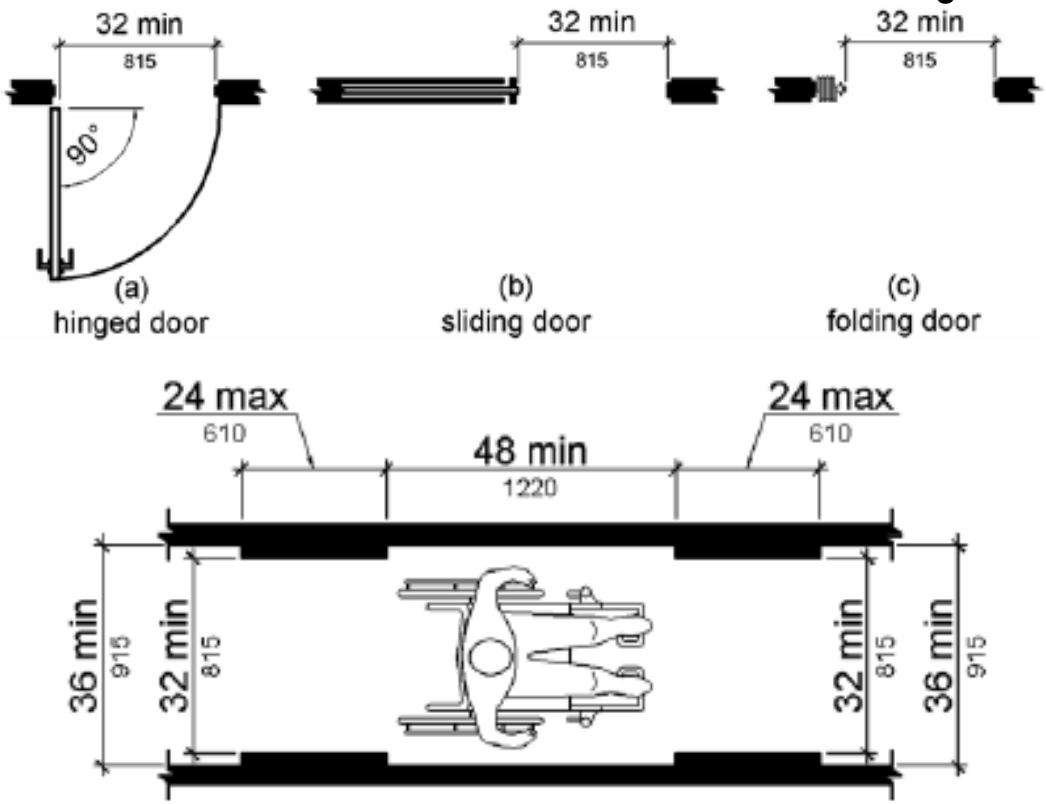

The graphics demonstrate the minimum requirements for accessible routes, including width and slope. The codes/standards are consistent.

ICC A117.1-2009

Surfaces within an accessible route should be "stable, firm, and slip resistant."

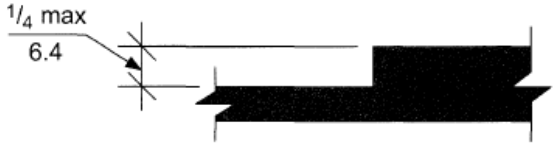

FIG. 303.2
CARPET ON FLOOR SURFACES

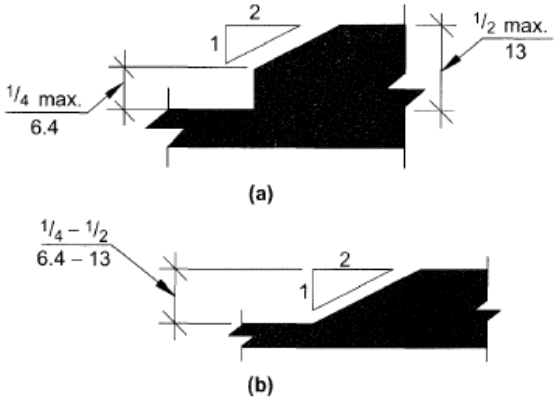

FIG. 303.3
BEVELED CHANGES IN LEVEL

Fair Housing Act Design Manual

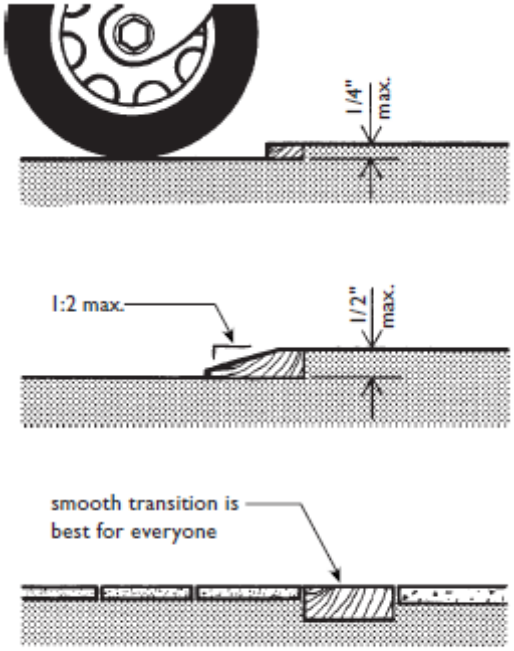

Small Changes in Level Along Accessible Routes

Hardened materials such as concrete, asphalt, tile, and wood are sufficiently firm and stable for accessibility.

Most loose materials, including gravel will not meet these requirements unless properly treated to provide sufficient surface integrity and resilience. Binders, consolidants, compaction, and grid forms may enable some of these materials to perform

2010 ADA Standards for Accessible Design

Federal standards use the terms “stable, firm, and slip resistant” in describing an accessible surface.

Section 4:

Ramps

Often an accessible route must include a ramp to provide adequate access from one feature to another. A ramp is defined as any portion of an accessible route that exceeds a 1/20 slope. The three key parts of the ramp addressed in this section include slope and surface, railings, and landings to provide specific and consistent guidelines for building specifications.

The inspector and/or plans reviewer must ensure that architects and engineers provide details of all ramps for any building project. The connection between an accessible route and proper ramping should be clear and well defined.

Building professionals should ensure that construction drawings depict the proper specifications for a ramp feature and that the built feature is consistent with the drawing details. Ramp design must also address safety concerns.

Quite simply, an accessible route that has a slope over 1/20 is a ramp and must meet the standards for an accessible ramp. Also, any change in level exceeding ½ inch (13mm) must be ramped.

Comparison of ICC, Fair Housing, and ADA Standards

Ramps	ICC A117.1-2009	Pages	Fair Housing Act Design Manual	Pages	2010 ADA Standards for Accessible Design	Section	Comments
Slope & Surface	Ramp runs shall have a running slope greater than 1:20 and not steeper than 1:12.	22	References ANSI A117.1 Section 4.8.	1.56 -2.5	Ramp runs shall have a running slope not steeper than 1:12. Floor or ground surfaces of ramp runs shall comply with 302. Changes in level other than the running slope and cross slope are not permitted on ramp	405	**All standards agree on slope and surfaces. A ramp is defined as having a running slope of over 1/20.**
Railings	Ramp runs with a rise greater than 6 inches (150 mm) shall have handrails complying with Section 505.	22	References ANSI A117.1 Section 4.8.	1.7 - 2.16	Where handrails are provided along walking surfaces with running slopes not steeper than 1:20 they shall comply with 505.	405.8, 405.9	**The three codes agree with the Fair Housing Publication referring to the ANSI standards.**
Landings	Ramps shall have landings at the bottom and top of each ramp run. Landings shall comply with Section 405.7.	22	References ANSI A117.1 Section 4.8.	3.11 - 4.11	Ramps shall have landings at the top and the bottom of each ramp run. Landings shall comply with 405.7.	405.7-405.7.5	**Requirements are the same.**

ICC A117.1-2009

Fair Housing Act Design Manual

As long as minimum ramp standards are maintained, ramp design and configuration may vary greatly.

2010 ADA Standards for Accessible Design

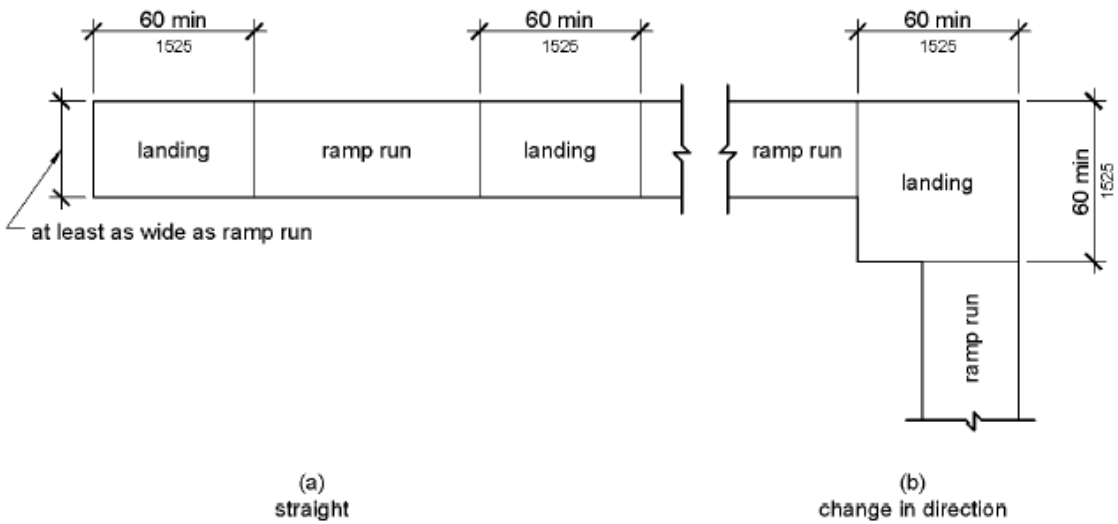

A ramp often forms an important part of an accessible route. The slope and surface type are illustrated in the graphics in this section. The three codes/standards address this area consistently.

ICC A117.1-2009

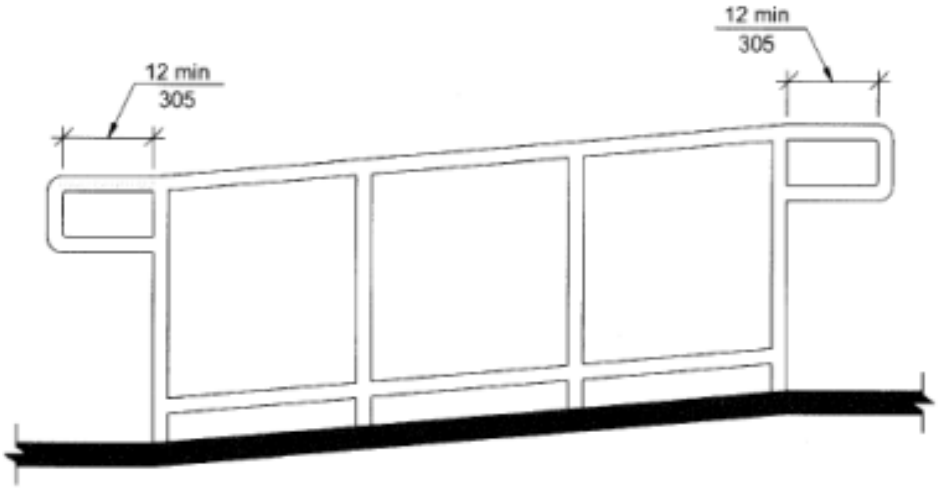

FIG. 505.10.1
TOP AND BOTTOM HANDRAIL EXTENSIONS AT RAMPS

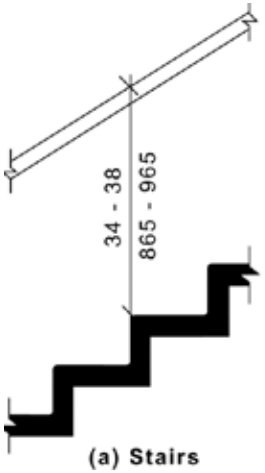

(a) Stairs

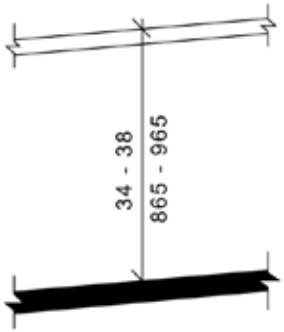

(b) Ramps

Fair Housing Act Design Manual

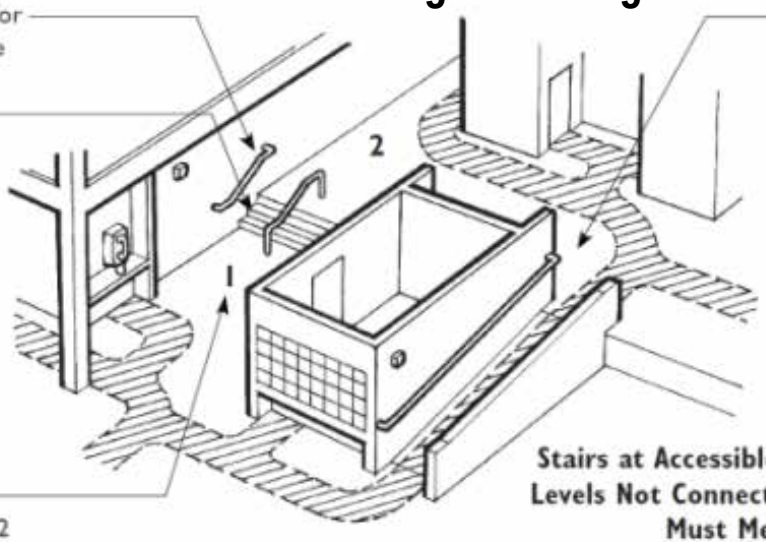

Stairs at Accessible Routes Between Levels Not Connected By an Elevator Must Meet ANSI

2010 ADA Standards for Accessible Design

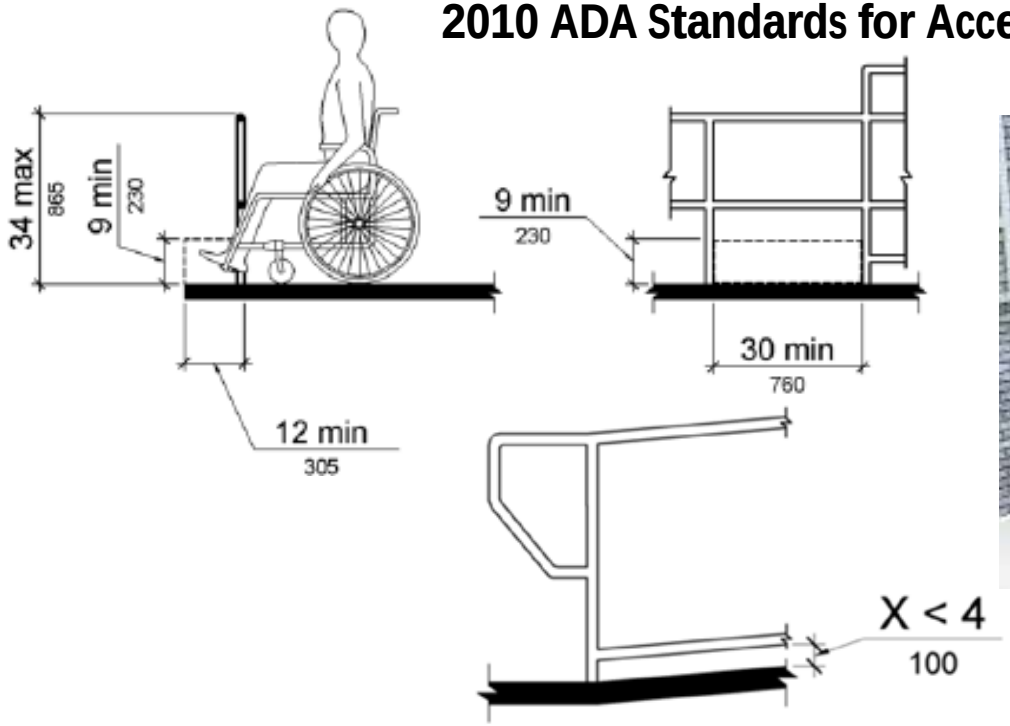

Figure 405.9.2
Curb or Barrier Edge Protection

Railing for both ramps and steps provide security and safety for all individuals. There is little difference among the three codes/standards.

Section 5:

Doors

Individuals with limited mobility and limited upper body strength often find doors that do not meet the accessibility standards reviewed in this manual. Various types of doors, widths and thresholds, and handles are described in this section. While little difference exists in the three code standards reviewed, building professionals should note that often a specific type and configuration of door could assist greatly in an individual's pursuit for independence. For instance, a pocket door, when feasible, could be more easily used by a person with limited hand strength within their residence.

Building inspectors and plan reviewers should ensure that accessibility standards be maintained to assure that a person with limited dexterity and limited hand control can maneuver through these very important parts of an accessible route.

Of particular concern, building professionals should note that the force required to activate operable parts should not exceed five pounds of pressure. This requirement is listed in the US Standards for Accessible Design. Too often structures are built or renovated with doors that cannot be accessed by people with limited dexterity.

Comparison of ICC, Fair Housing, and ADA Standards

Doors	ICC A117.1-2009	Pages	Fair Housing Act Design Manual	Pages	2010 ADA Standards for Accessible Design	Section	Comments
Types of Doors for Different Circumstances	Doors and doorways that are part of an accessible route shall comply with Section 404. Manual doors and doorways, and manual gates, including ticket gates, shall comply with Section 404.2. At least one of the active leaves of doorways with two leaves shall comply with Sections 404.2.2 and 404.2.3.	15, 16	The exterior of the primary entry door of covered dwelling units is part of public and common use spaces, therefore, it must be on an accessible route and be accessible, i.e., meet the ANSI requirements of 4.13 Doors. All secondary exterior doors from the same or different rooms that provide passage onto exterior decks, patios, or balconies must be usable. Closets that require users to pass through the doorway to reach the contents must have doors that provide at least 32 inches nominal clear opening.	3.10 - 3.15	Door openings shall provide a clear width of 32 inches (815 mm) minimum. Clear openings of doorways with swinging doors shall be measured between the face of the door and the stop, with the door open 90 degrees. Openings more than 24 inches (610 mm) deep shall provide a clear opening of 36 inches (915 mm) minimum.	404.2.3	**No significant difference exists among the three standards.**

Comparison of ICC, Fair Housing, and ADA Standards

Doors	ICC A117.1-2009	Pages	Fair Housing Act Design Manual	Pages	2010 ADA Standards for Accessible Design	Section	Comments
Width of Doors and Thresholds	Doorways shall have a clear opening width of 32 inches (815 mm) minimum. Openings more than 24 inches (610 mm) in depth at doors and doorways without doors shall provide a clear opening width of 36 inches (915 mm) minimum.	15, 16	All primary and secondary doors must provide a clear width of open doorway min. 32" (references ANSI 4.13.5). A passage door must still be provided that will yield the 32-inch nominal clear width.	3.10 - 3.15	Thresholds, if provided at doorways, shall be 1/2 inch (13 mm) high maximum. Raised thresholds and changes in level at doorways shall comply with 302 and 303.	404.2.5	**No significant difference exists among the three standards.**

Comparison of ICC, Fair Housing, and ADA Standards

Doors	ICC A117.1-2009	Pages	Fair Housing Act Design Manual	Pages	2010 ADA Standards for Accessible Design	Section	Comments
Maneuvering Room	Minimum maneuvering clearances at doors shall comply with Section 404.2.3 and shall include the full clear opening width of the doorway. Required door maneuvering clearances shall not include knee and toe clearance.	17	The required maneuvering space on the exterior side of door next to latch varies depending upon direction of approach to door (references ANSI 4.13.6).	3.10 - 3.15	Floor or ground surface within required maneuvering clearances shall comply with 302. Changes in level are not permitted. EXCEPTIONS: 1. Slopes not steeper than 1:48 shall be permitted. 2. Changes in level at thresholds complying with 404.2.5 shall be permitted.	404.2.4	**No significant difference exists among the three standards.**
Door Handles	Handles, pulls, latches, locks, and other operable parts on accessible doors shall have a shape that is easy to grasp with one hand and does not require tight grasping, pinching, or twisting of the wrist to operate. Operable parts of such hardware shall be 34 inches (865 mm) minimum and 48 inches (1220 mm) maximum above the floor.	19	Lever or other easy to use door hardware is recommended (references ANSI 4.13.9).	3.10 - 3.15	Operable parts shall be operable with one hand and shall not require tight grasping, pinching, or twisting of the wrist. The force required to activate operable parts shall be 5 pounds (22.2 N) maximum.	309.4	**All three standards use similar language.**

ICC A117.1-2009

The transition from the 36 inch minimum width for an accessible route can be reduced to 32 inches for a doorway for a 24 inch maximum passage length.

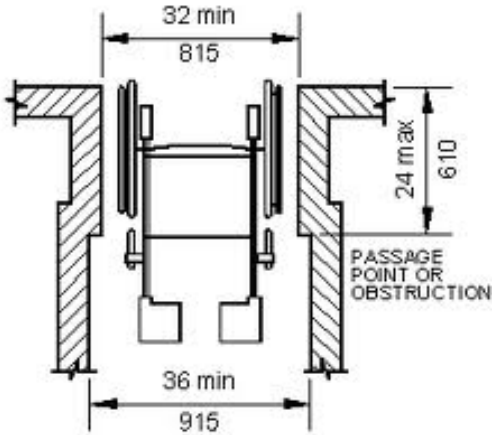

Fair Housing Act Design Manual

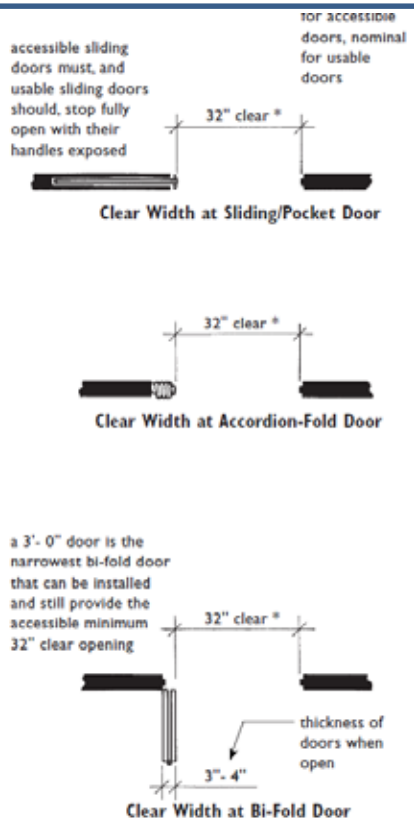

2010 ADA Standards for Accessible Design

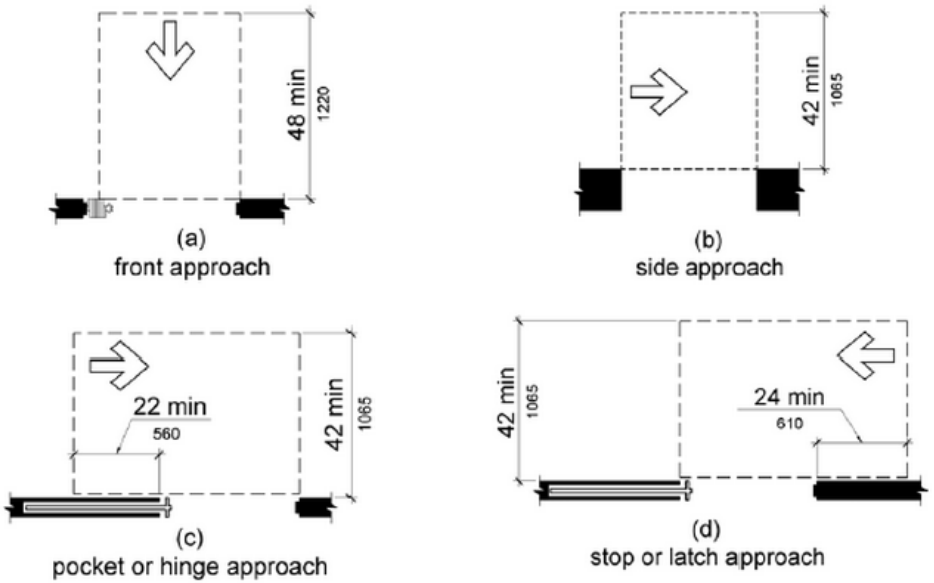

Maneuvering Clearances at Doorways without Doors, Sliding Doors, Gates, and Folding Doors

Doors are an important part of any accessible route. This section provides specifications for door widths and different types of doors.

Width of Door and Thresholds

ICC A117.1-2009

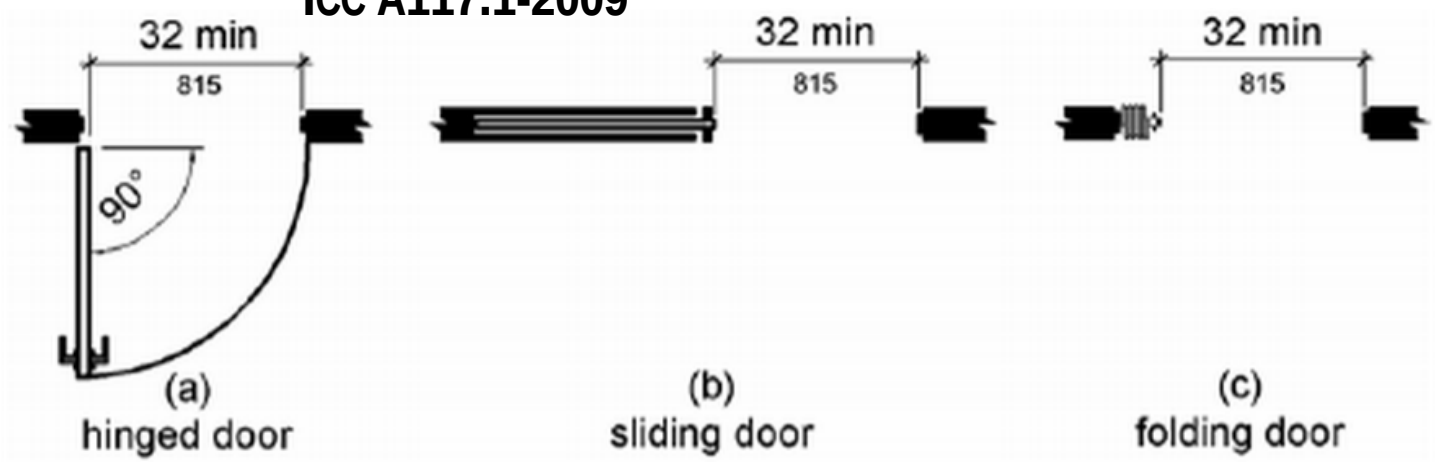

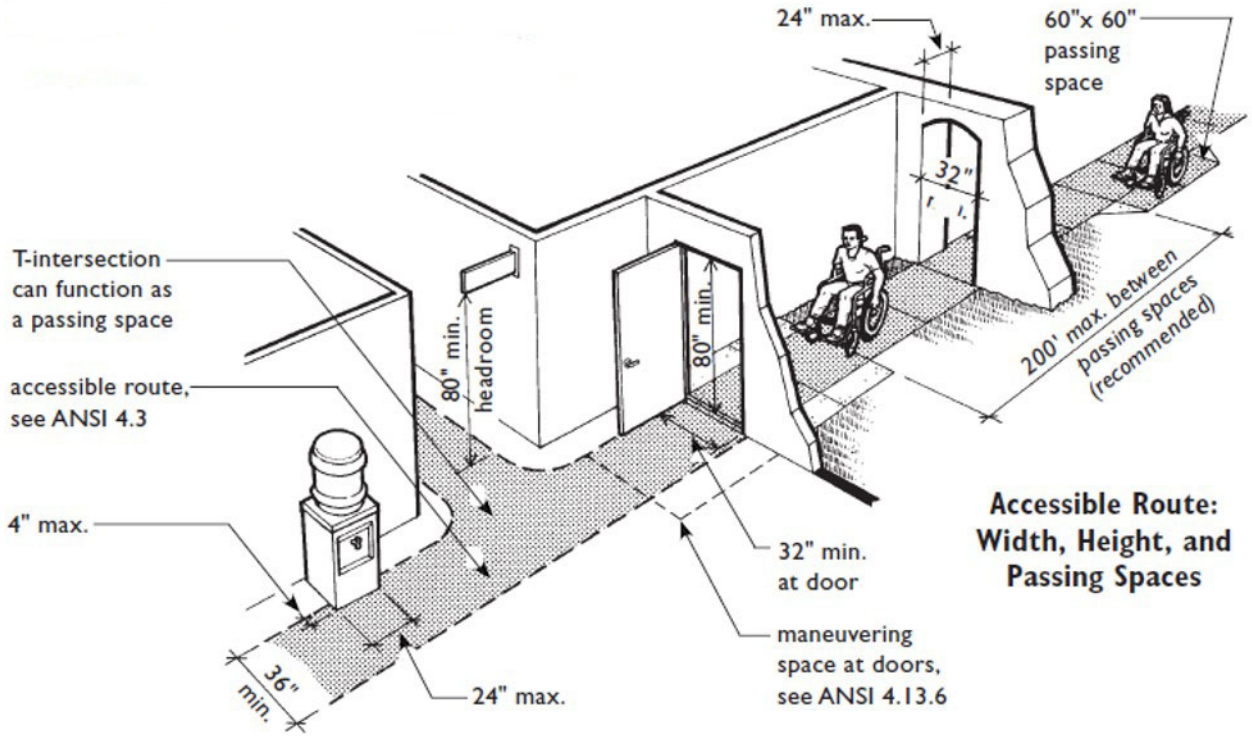

Accessible Route: Width, Height, and Passing Spaces

Fair Housing Act Design Manual

2010 ADA Standards for Accessible Design

Table 404.2.4.2 Maneuvering Clearances at Doorways without Doors or Gates, Manual Sliding Doors, and Manual Folding Doors

	Minimum Maneuvering Clearance	
Approach Direction	**Perpendicular to Doorway**	**Parallel to Doorway (beyond stop/latch side unless noted)**
From Front	48 inches (1220 mm)	0 inches (0 mm)
From side[1]	42 inches (1065 mm)	0 inches (0 mm)
From pocket/hinge side	42 inches (1065 mm)	22 inches (560 mm)[2]
From stop/latch side	42 inches (1065 mm)	24 inches (610 mm)

1. Doorway with no door only.
2. Beyond pocket/hinge side.

The minimum standards of doors are consistent among the three guidelines. Persons with limited dexterity in their upper extremities benefit from many of these standards.

ICC A117.1-2009

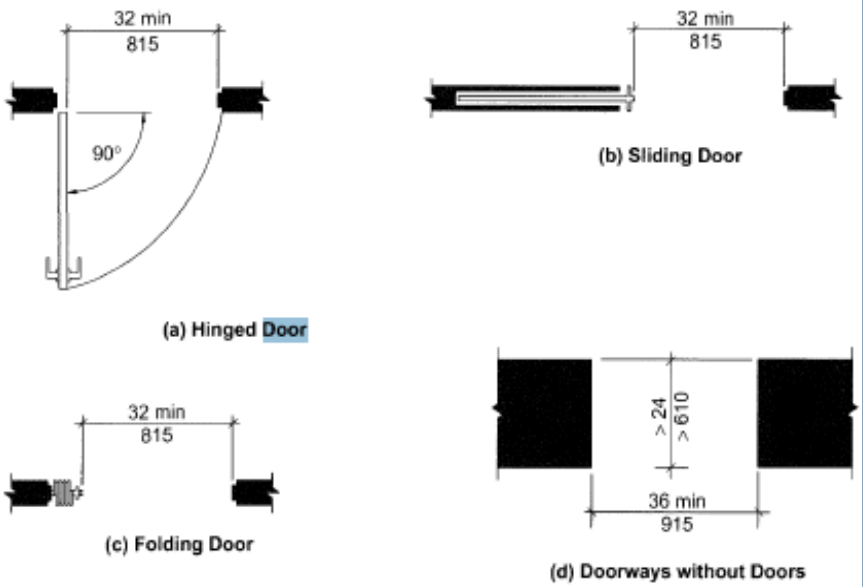

FIG. 404.2.2
CLEAR WIDTH OF DOORWAYS

Fair Housing Act Design Manual

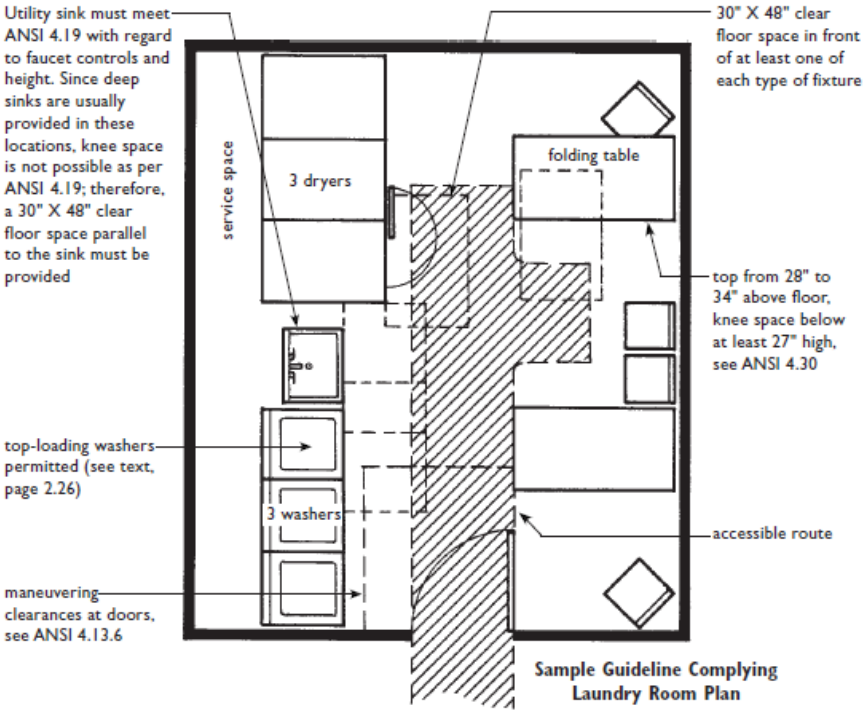

Sample Guideline Complying Laundry Room Plan

Maneuvering Room

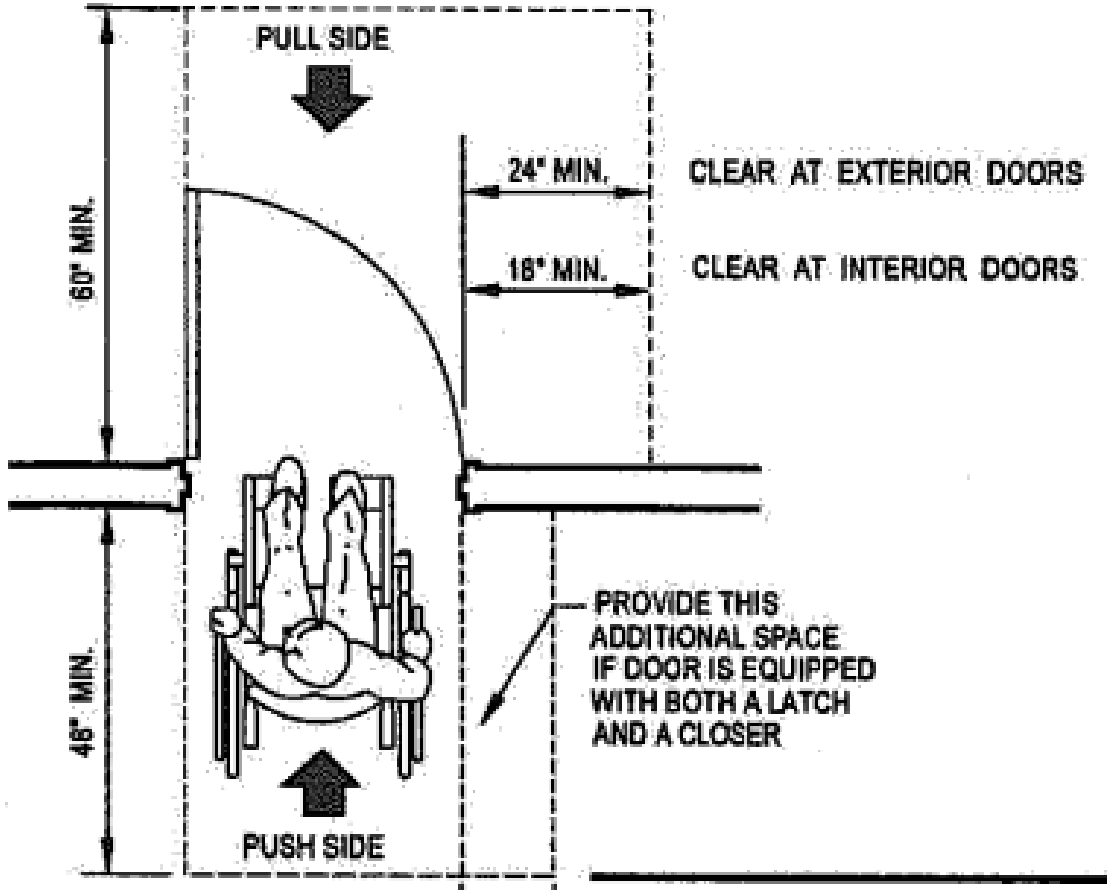

2010 ADA Standards for Accessible Design

Maneuverability and room for a person to approach and enter a doorway provides a person in a wheelchair an opportunity to travel independently. The three standards are basically consistent.

Door Handles

ICC A117.1-2009

Fair Housing Act Design Manual

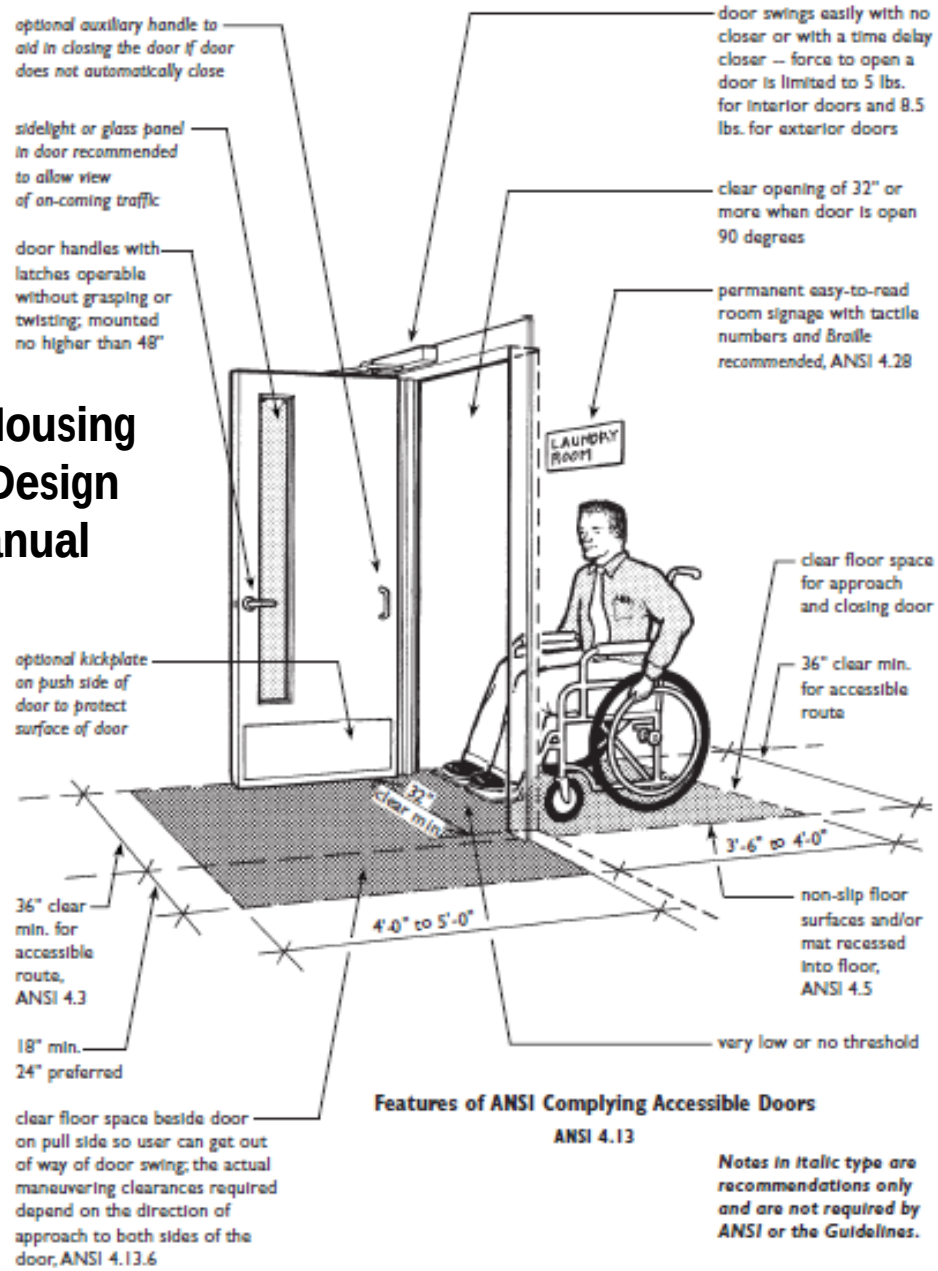

2010 ADA Standards for Accessible Design

Examples of Accessible Door Hardware			
Handle	Pull	Bar	Lever
	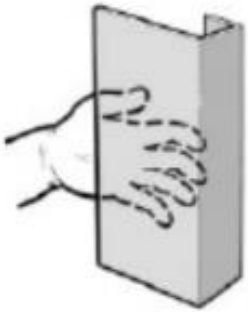		

These are useful alternatives to the old door knob of years past. The illustrations give useful adaptations for persons with limited dexterity or use of their hands.

Section 6:

Bathrooms and Toilets

This section of the reference manual addresses several of the more important accessibility standards affecting bathroom and toilet design. Accessibility standards concerning the bathroom areas are not only intended to increase the usability of these spaces, but also serve to increase the safety factor of the spaces.

Due to the many different configurations of existing bathrooms, an examination of the three code standards should provide a number of alternatives for the building professional to meet the guidelines for a specific project.

Many of the standards listed throughout this manual are also integral items affecting bathroom design. Items such as accessories, light switches, and grab bars are necessary aids in an accessible bathroom. Also, the Fair Housing Act allows building professionals to prepare walls to accept grab bars in certain instances.

Comparison of ICC, Fair Housing, and ADA Standards

Bathroom & Toilets	ICC A117.1-2009	Pages	Fair Housing Act Design Manual	Pages	2010 ADA Standards for Accessible Design	Section	Comment
Commode Location	The water closet shall be located with a wall or partition to the rear and to one side. The centerline of the water closet shall be 16 inches (405 mm) minimum and 18 inches (455 mm) maximum from the side wall or partition. Water closets located in ambulatory accessible compartments specified in Section 604.10 shall have the centerline of the water closet 17 inches (430 mm) minimum and 19 inches (485 mm) maximum from the side wall or partition.	46	The unobstructed clear floor space required by the Guidelines allows a wheelchair user to approach the toilet and transfer onto the fixture using a variety of independent and assisted transfer techniques. The clear floor spaces provided at toilets allow people using wheelchairs and walkers to maneuver, approach the seat, and make a safe transfer onto the toilet.	7.43-7.48	Where toilet compartments are provided, at least one toilet compartment shall comply with 604.8.1. In addition to the compartment required to comply with 604.8.1, at least one compartment shall comply with 604.8.2 where six or more toilet compartments are provided, or where the combination of urinals and water closets totals six or more fixtures.	213, 604, 806.2.4, 807, 809.4	**Basically the codes/standards are the same. The Fair Housing Publication addresses different bathroom configurations.**
Grab Bars	Grab bars for water closets shall comply with Section 609 and shall be provided in accordance with Sections 604.5.1 and 604.5.2. Grab bars shall be provided on the rear wall and on the side wall closest to the water closet.	47	The Guidelines do not require that grab bars be installed in bathrooms. However, the Guidelines do require that bathroom walls be sufficiently strong to allow for later installation of grab bars for resident use. This requirement applies to all bathrooms.	6.3 - 6.16	The space between the wall and the grab bar shall be 1 1/2 inches (38 mm). The space between the grab bar and projecting objects below and at the ends shall be 1 1/2 inches (38 mm) minimum. The space between the grab bar and projecting objects above shall be 12 inches (305 mm) minimum.	609	**Very little difference is present among the codes/standards.**

Comparison of ICC, Fair Housing, and ADA Standards

Bathrooms & Toilets	ICC A117.1-2009	Pages	Fair Housing Act Design Manual	Pages	2010 ADA Standards for Accessible Design	Section	Comment
Dispensers and Accessories	Toilet paper dispensers shall comply with Section 309.4. Where the dispenser is located above the grab bar, the outlet of the dispenser shall be located within an area 24 inches (610 mm) minimum and 36 inches (915 mm) maximum from the rear wall. Where the dispenser is located below the grab bar, the outlet of the dispenser shall be located within an area 24 inches (610 mm) minimum and 42 inches (1065 mm) maximum from the rear wall.	48	Such appliances include washing machines, dryers, soap dispensers, and any related features such as wash sinks, tables, and storage areas. (Very limted guidelines are provided on dispenser and accessories.)	2.26	Plumbing fixtures and accessories provided in a toilet room or bathing room is required to comply with 213.2 and comply with 213.3.	213.2	**The codes/standards agree on reach requirements, but the 2010 ADA guidelines also utilize age criteria.**

Comparison of ICC, Fair Housing, and ADA Standards

Bathroom & Toilets	ICC A117.1-2009	Pages	Fair Housing Act Design Manual	Pages	2010 ADA Standards for Accessible Design	Section	Comment
Bathtubs & Showers	A clearance in front of bathtubs extending the length of the bathtub and 30 inches (760 mm) minimum in depth shall be provided. Where a permanent seat is provided at the head end of the bathtub, the clearance shall extend 12 inches (305 mm) minimum beyond the wall at the head end of the bathtub.	54	30" X 48" clear floor doubles as clear floor space at bathtub 7'- 9" space for maneuvering outside swing of door.	7.32 - 7.83	Clearance in front of bathtubs shall extend the length of the bathtub and shall be 30 inches (760 mm) wide minimum. A lavatory complying with 606 shall be permitted at the control end of the clearance. Where a permanent seat is provided at the head end of the bathtub, the clearance shall extend 12 inches (305 mm) minimum beyond the wall at the head end of the bathtub.	607, 608	**Basic ranges remain consistent. The Fair Housing Publication is based on ANSI, which is also the ICC standard.**

Commode Location

ICC A117.1-2009

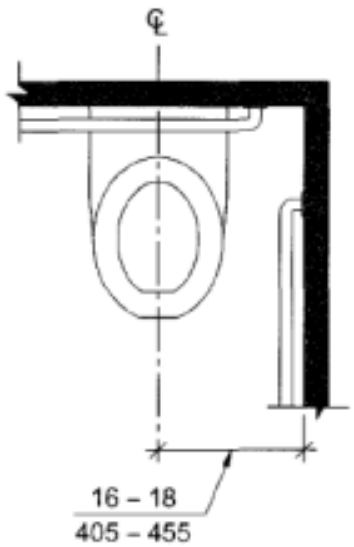

(a) Accessible Water Closets

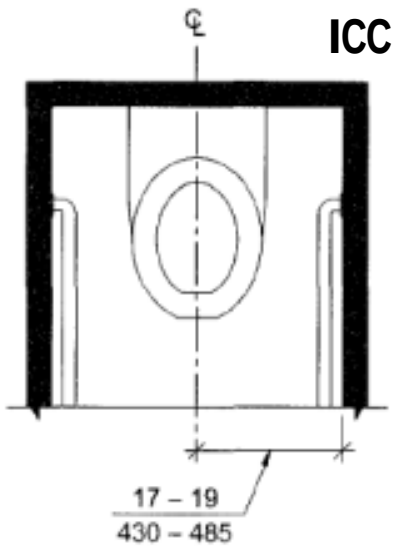

(b) Ambulatory Accessible Water Closets

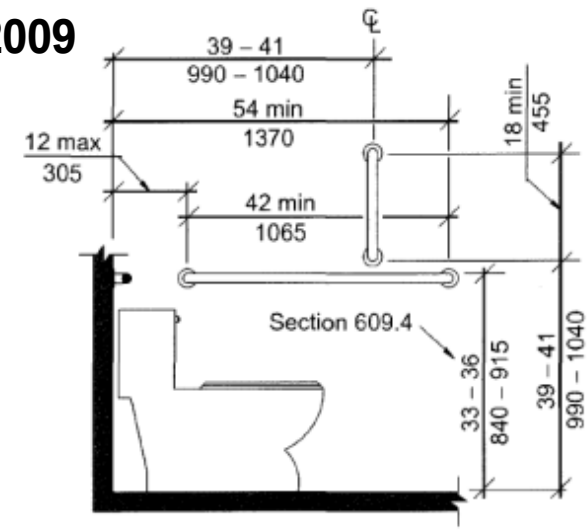

Note: For children's dimensions see Fig. 609.4.2

FIG. 604.5.1
SIDE WALL GRAB BAR FOR WATER CLOSET

Fair Housing Act Design Manual

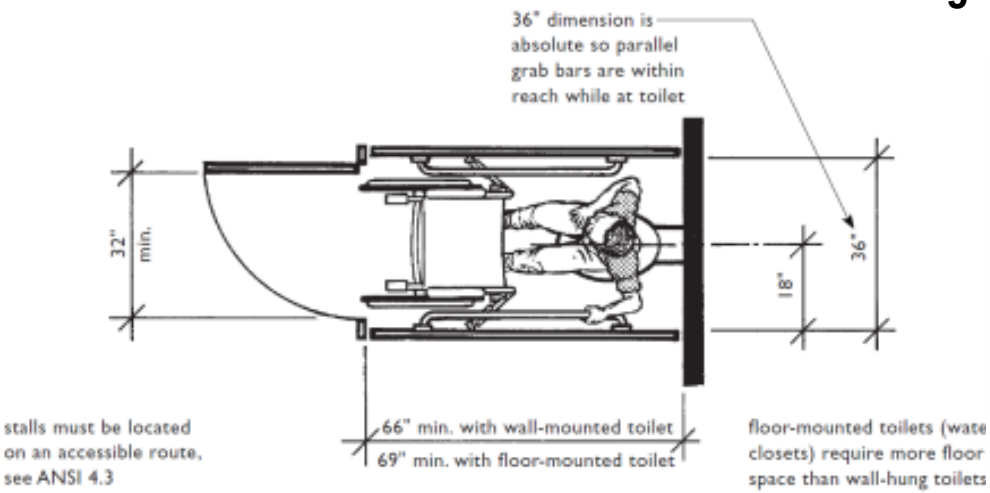

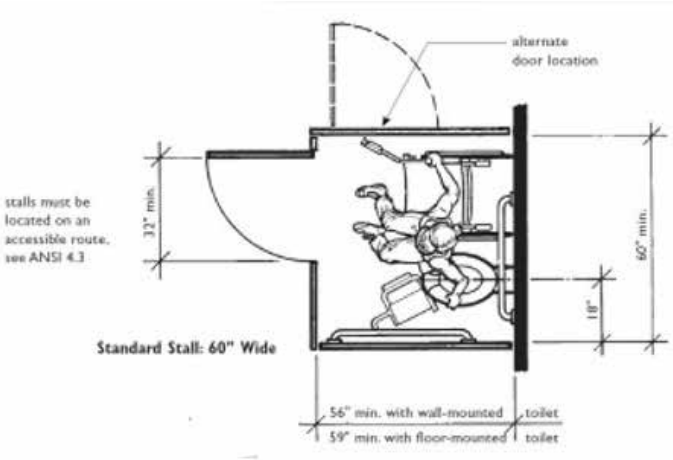

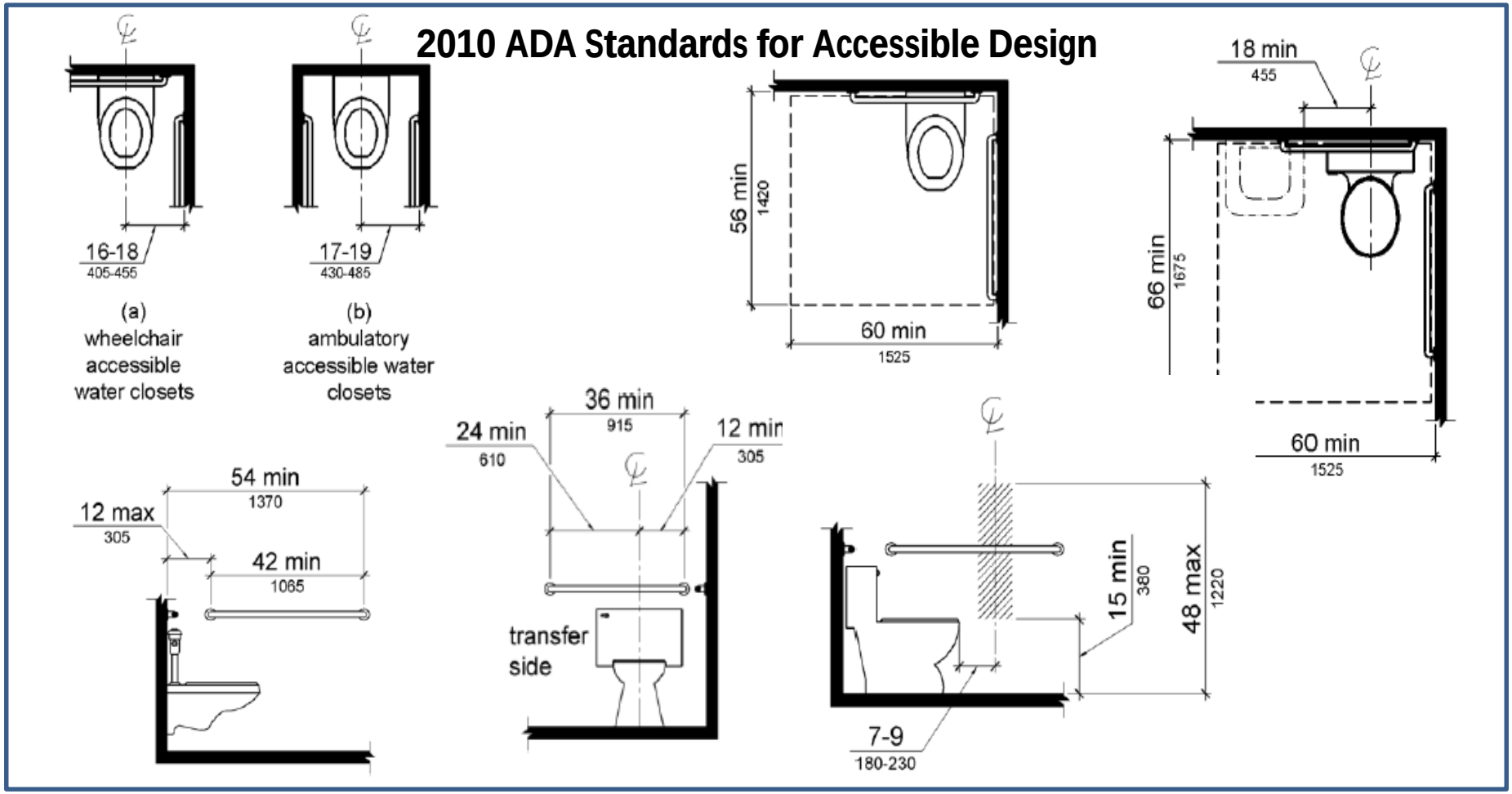

The illustrations on the previous pages provide basic alignments for the location of the commode in a bath stall. The three codes/standards vary little in their recommendations.

ICC A117.1-2009

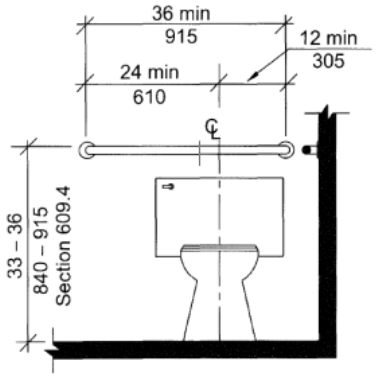

Note: For children's dimensions see Fig. 609.4.2

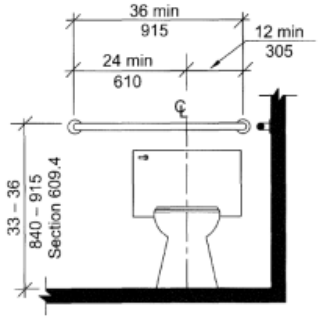

Note: For children's dimensions see Fig. 609.4.

FIG. 604.5.2
REAR WALL GRAB BAR FOR WATER CLOSET

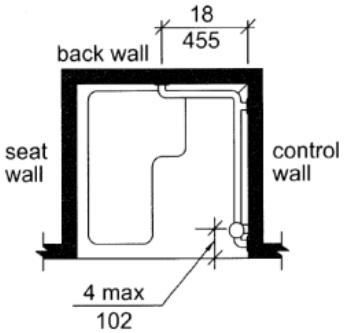

FIG. 608.3.1
GRAB BARS IN TRANSFER-TYPE SHOWERS

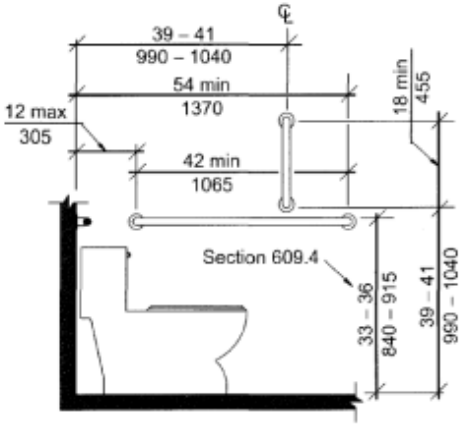

Note: For children's dimensions see Fig. 609.4.2

FIG. 604.5.1
SIDE WALL GRAB BAR FOR WATER CLOSET

Fair Housing Act Design Manual

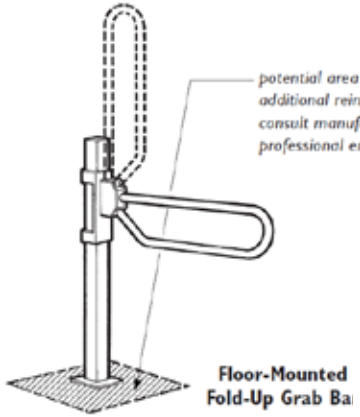

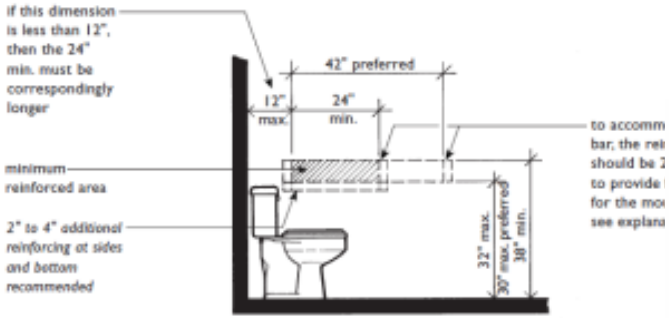

Minimum Reinforcing to the Side of Toilets

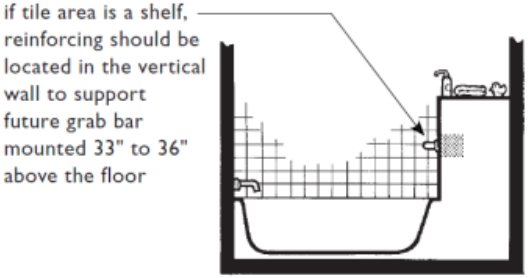

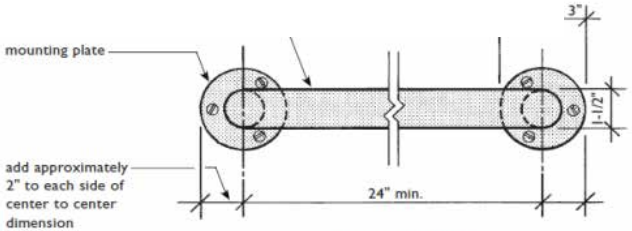

Escutcheon Plates
Extend Beyond the Given Grab Bar Length

2010 ADA Standards for Accessible Design

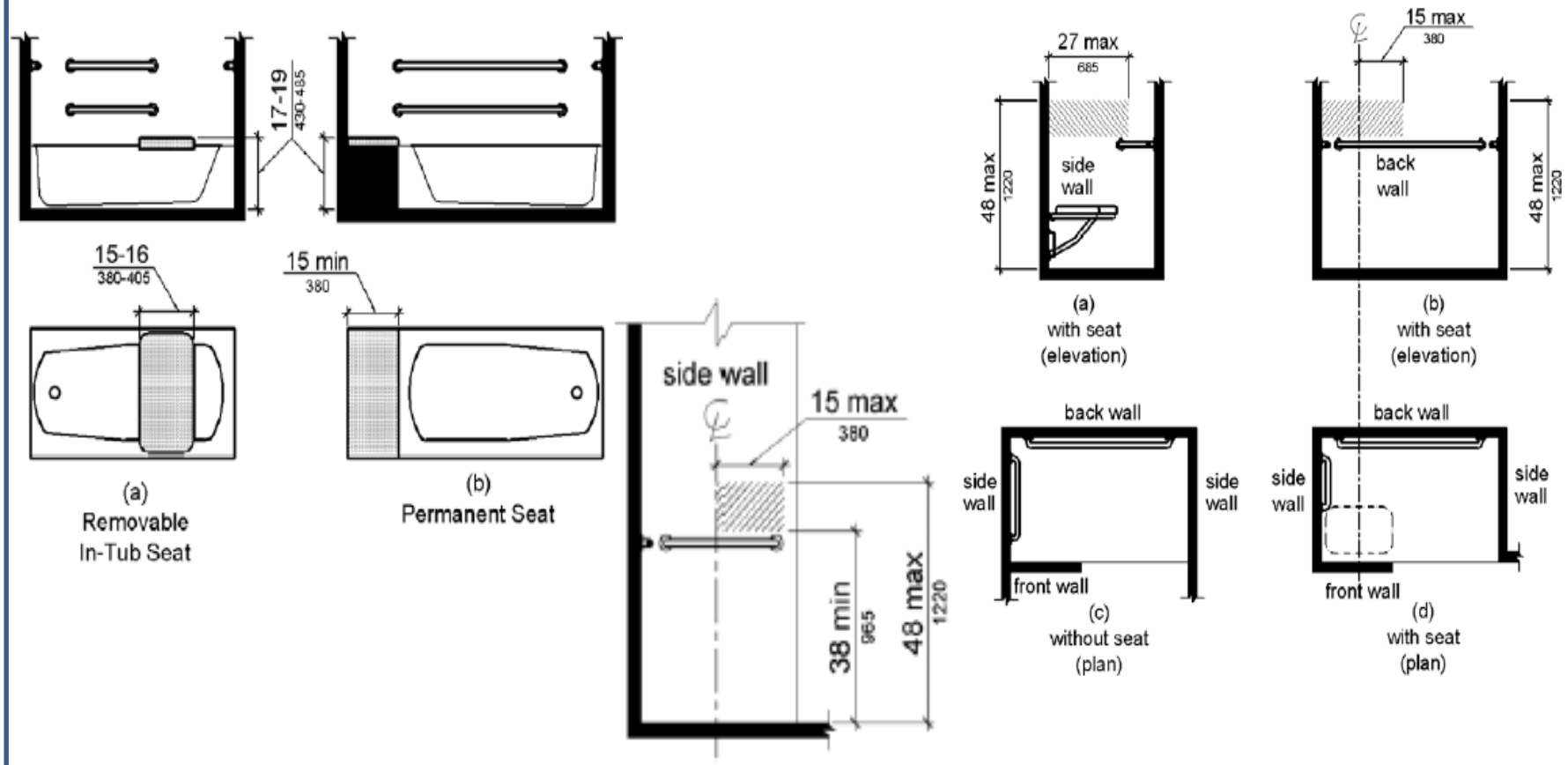

Grab bars are an essential part of accessibility in a bathroom. They provide a sense of independence and security.

ICC A117.1-2009

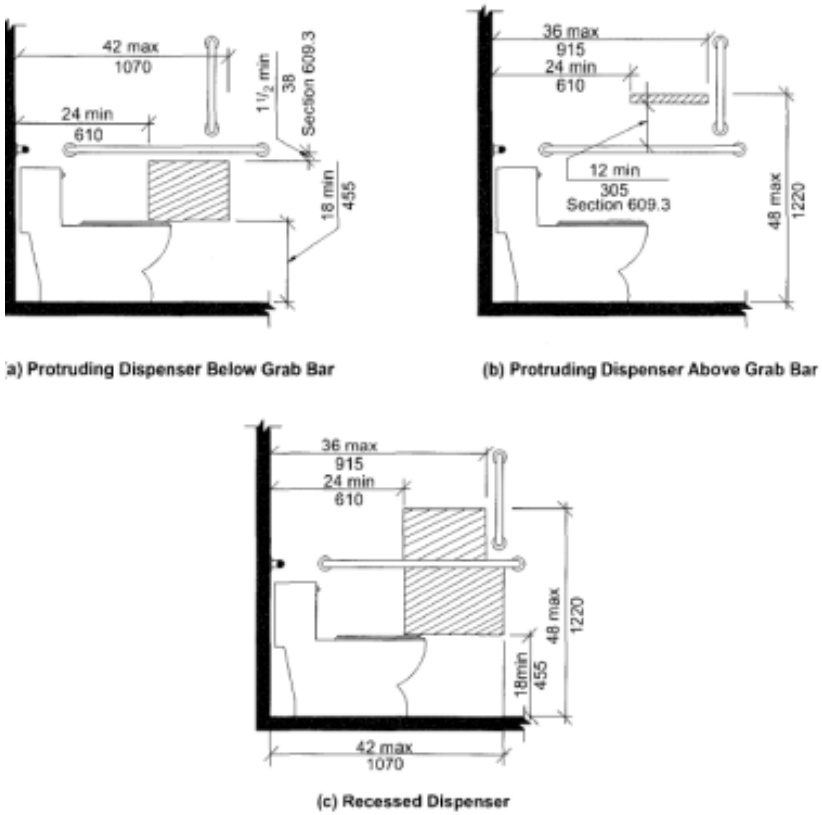

a) Protruding Dispenser Below Grab Bar

(b) Protruding Dispenser Above Grab Bar

(c) Recessed Dispenser

Note: For children's dimensions see Fig. 604.11.7 dispenser outlet location

FIG. 604.7
DISPENSER OUTLET LOCATION

The ICC provides details of distances and measurements of these items.

Fair Housing Act Design Manual

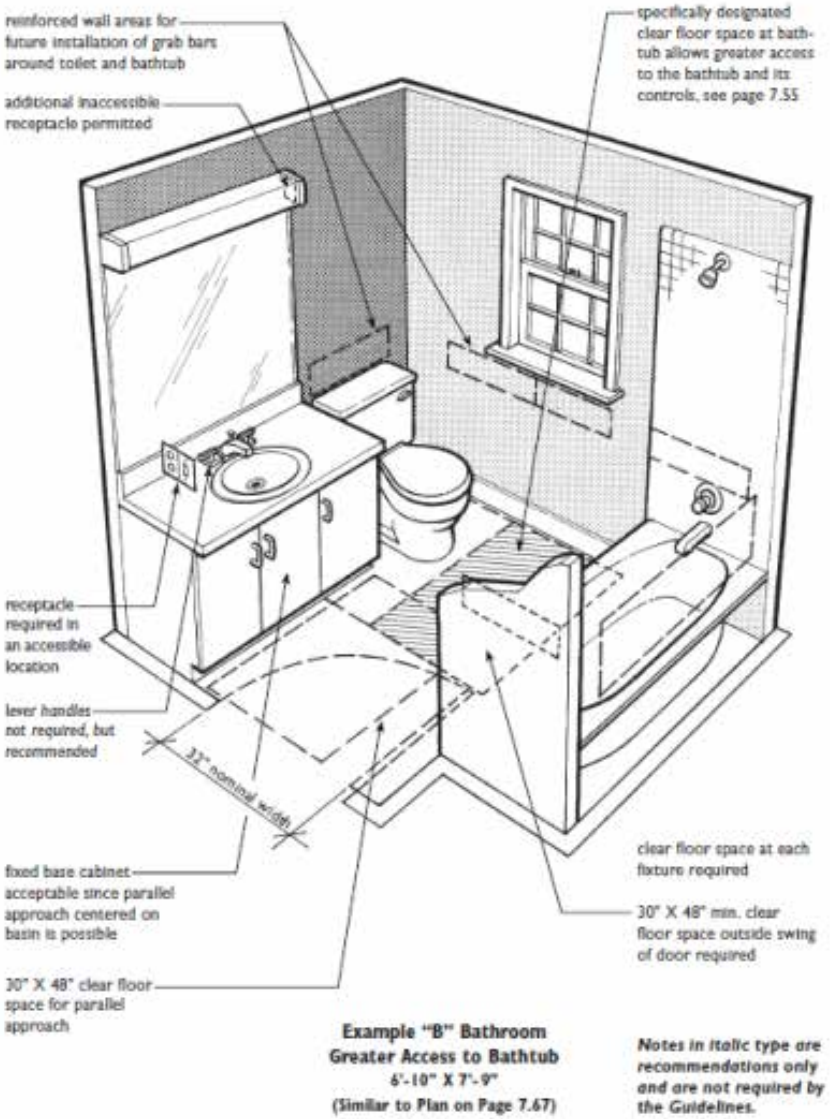

2010 ADA Standards for Accessible Design

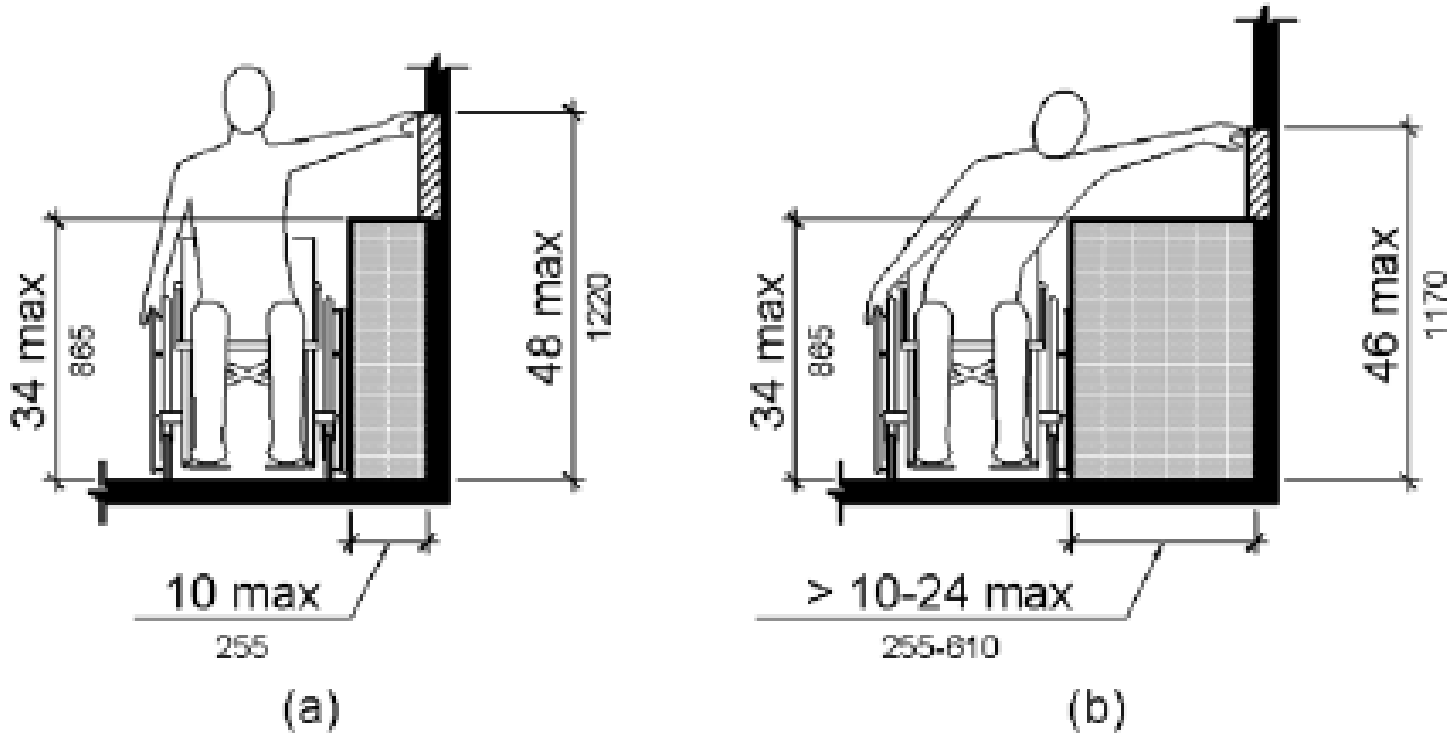

The standards for the locations of dispensers and accessories are basically the same in the three codes analyzed. The specifications can also be found in the reach standards found later in this document.

ICC A117.1-2009

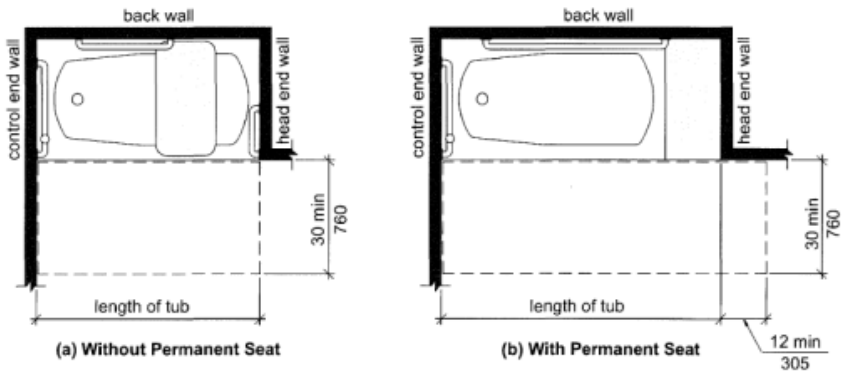

FIG. 607.2
CLEARANCE FOR BATHTUBS

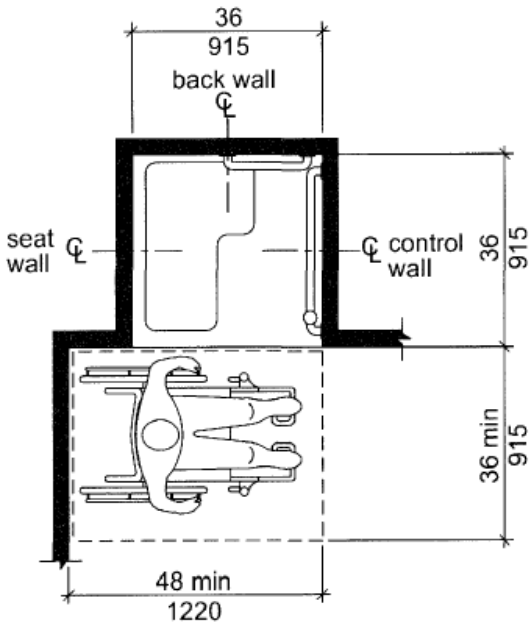

Note: inside finished dimensions measured at the center points of opposing sides

FIG. 608.2.1
TRANSFER-TYPE SHOWER
COMPARTMENT SIZE AND CLEARANCE

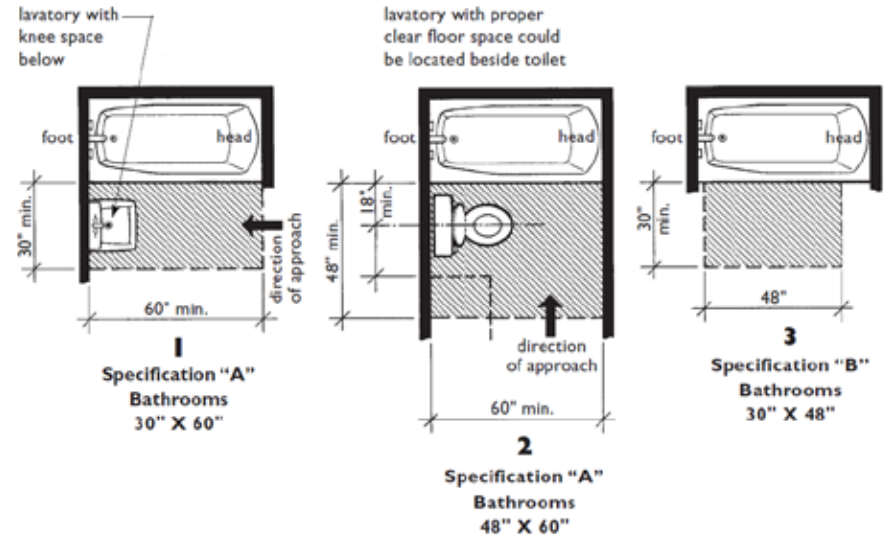

Clear Floor Space at Bathtubs/Showers
Shaded Areas Must Remain Unobstructed

Fair Housing Act Design Manual

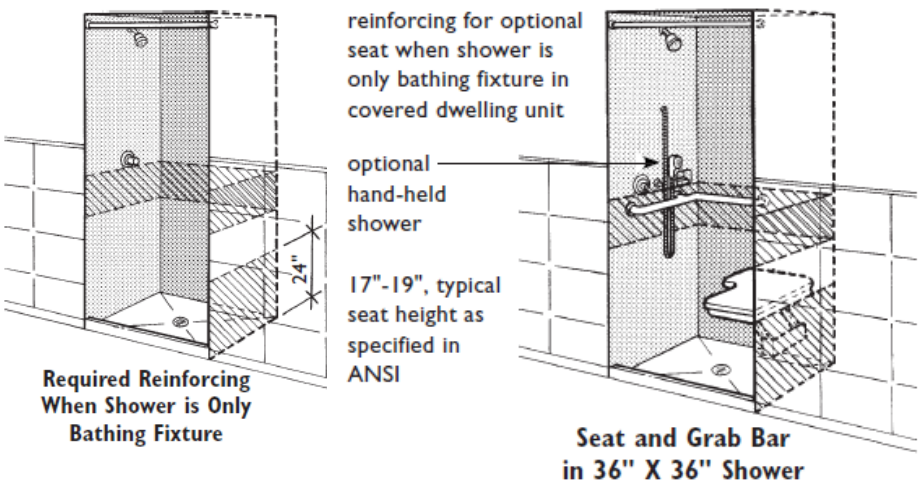

2010 ADA Standards for Accessible Design

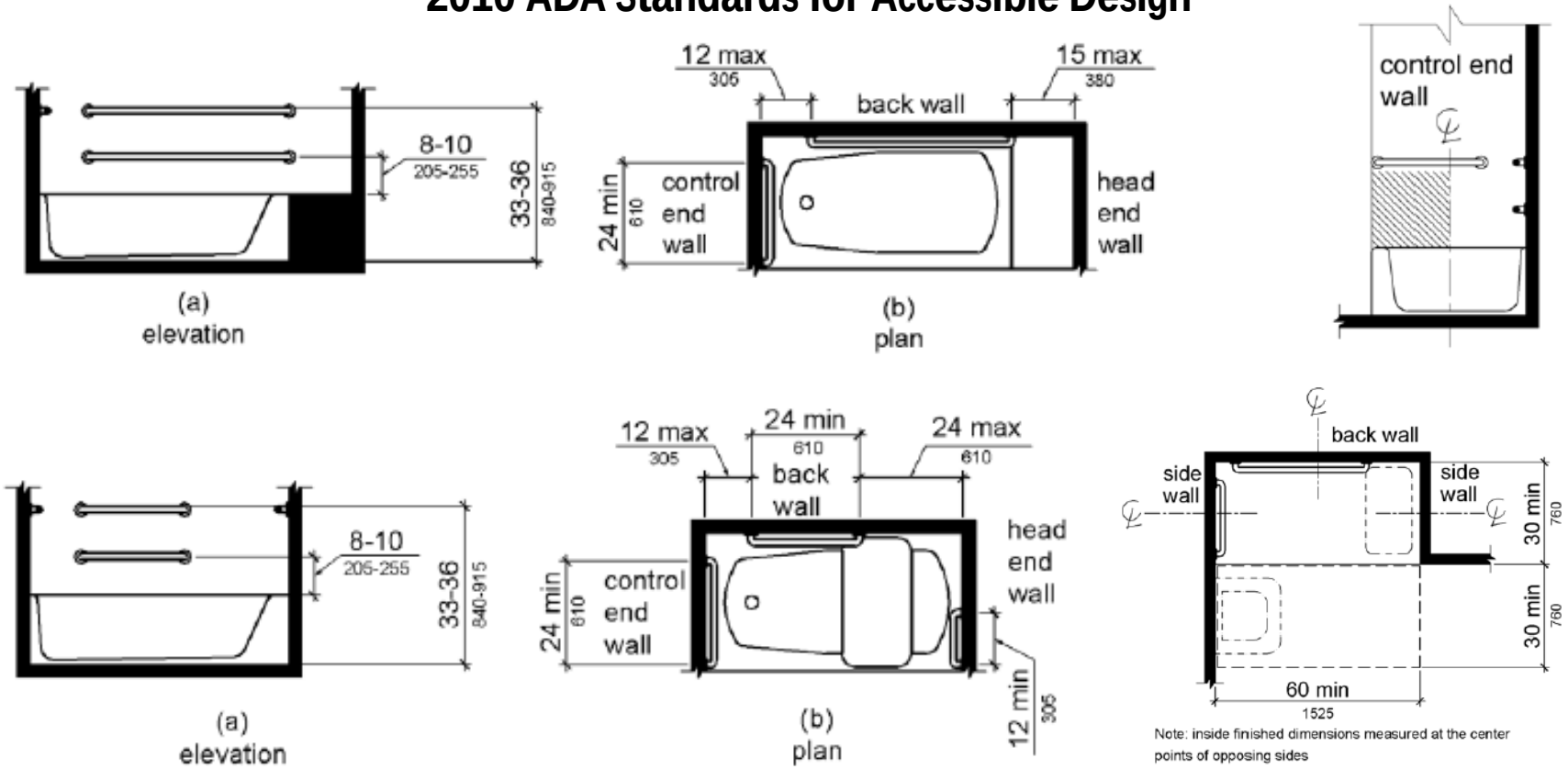

Bathtub and shower specifications are based on ANSI. The illustrations provided give a variety of configurations and dimensions.

Section 7:
Drinking Fountains

The issue of the location and configuration of drinking fountains has received significant regulatory attention in recent years to incorporate these fixtures into a broader accessible context.

The critical design elements for drinking fountain installation are: 1) to ensure the location of drinking fountains out of the path of an accessible route; 2) to ensure the integration of the accessible fixtures with all other drinking facilities; 3) and to ensure the accessibility of at least 50% of all drinking fixtures.

The advent of the dual height drinking fountain has provided a great improvement in the proper provision of drinking fountains. In many cases, these fountains can be installed with little or no additional expense for both new and reconstruction projects.

Comparison of ICC, Fair Housing, and ADA Standards

Drinking Fountains	ICC A117.1-2009	Pages	Fair Housing Act Design Manual	Pages	2010 ADA Standards for Accessible Design	Section	Comments
Forward Reaches	Where a forward reach is unobstructed, the high forward reach shall be 48 inches (1220 mm) maximum and the low forward reach shall be 15 inches (380 mm) minimum above the floor.	45	Not Specified	NA	Spout outlets shall be 36 inches (915 mm) maximum above the finish floor or ground. The spout shall be located 15 inches (380 mm) minimum from the vertical support and 5 inches (125 mm) maximum from the front edge of the unit, including bumpers.	602.5-602.7	**The codes are consistent. The Fair Housing Publication refers to the ANSI standards.**
Relationship with Accessible Route	A clear floor space complying with Section 305, positioned for a forward approach to the drinking fountain, shall be provided. Knee and toe space complying with Section 306 shall be provided. The clear floor space shall be centered on the drinking fountain.	45	There must always be a 36-inch wide accessible route around any obstacle. Protruding objects are prohibited along all circulation paths including accessible routes and stairs.	2.18, 2.19	Objects with leading edges more than 27 inches (685 mm) and not more than 80 inches (2030 mm) above the finish floor or ground shall protrude 4 inches (100 mm) maximum horizontally into the circulation path.	307	**The text clearly shows that the accessible fountain should be located with other water fountains.**
Numbers Required	Not Specified	NA	Where drinking fountains or water coolers are provided, 50 percent on each floor, or at least one, must be on an accessible route and comply with ANSI 4.15.	2.13	No fewer than two drinking fountains shall be provided. One drinking fountain shall comply with 602.1 through 602.6 and one drinking fountain shall comply with 602.7.	211.2	**The rules are consistent with 50 percent of the fountains required to be accessible. Dual fountains are preferrable where possible.**

ICC A117.1-2009

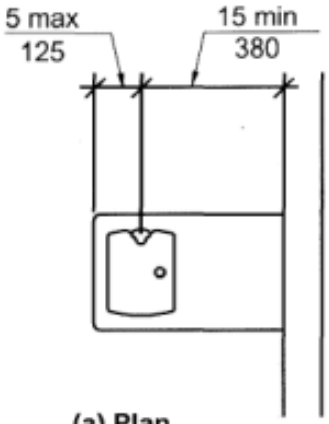

(a) Plan

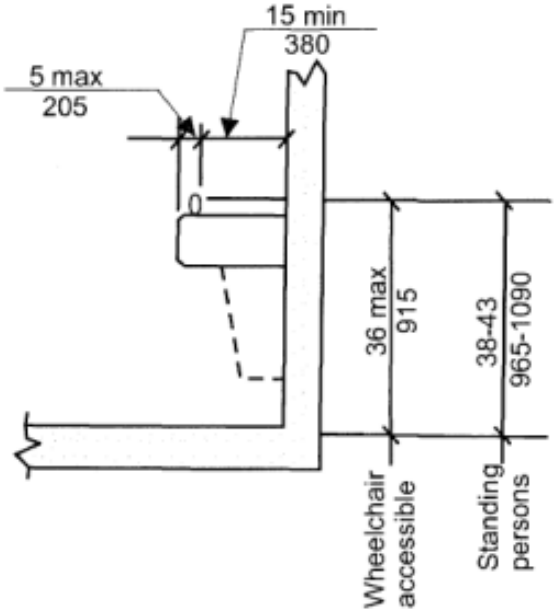

Fair Housing Act Design Manual

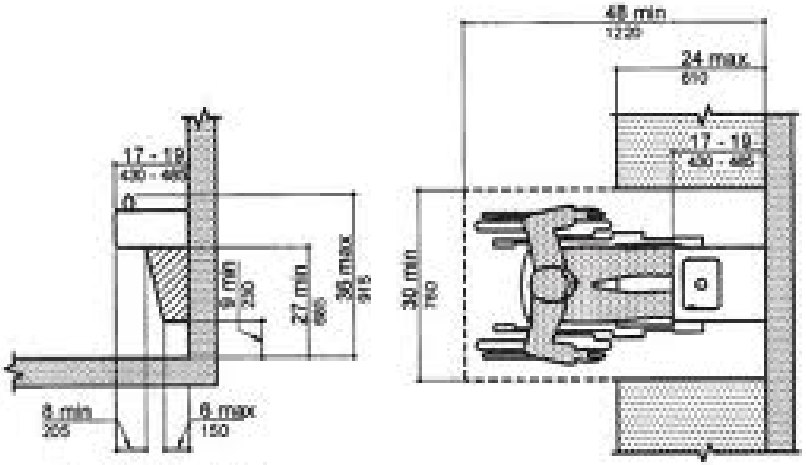

(a) Spout Height and Knee Clearance

(b) Clear Floor Space

2010 ADA Standards for Accessible Design

The dual type drinking fountains are a recent innovation that provides better access in similar locations and circumstances. The reach standards of the three codes are basically the same.

ICC A117.1-2009

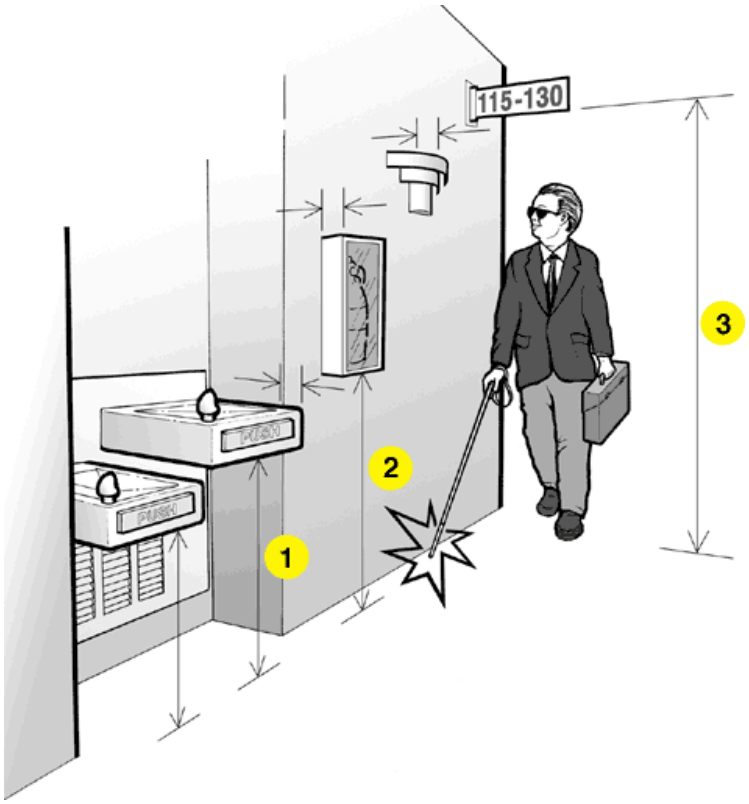

Objects projecting into an accessible route should be minimized and adhere to height and width standards.

Fair Housing Act Design Manual

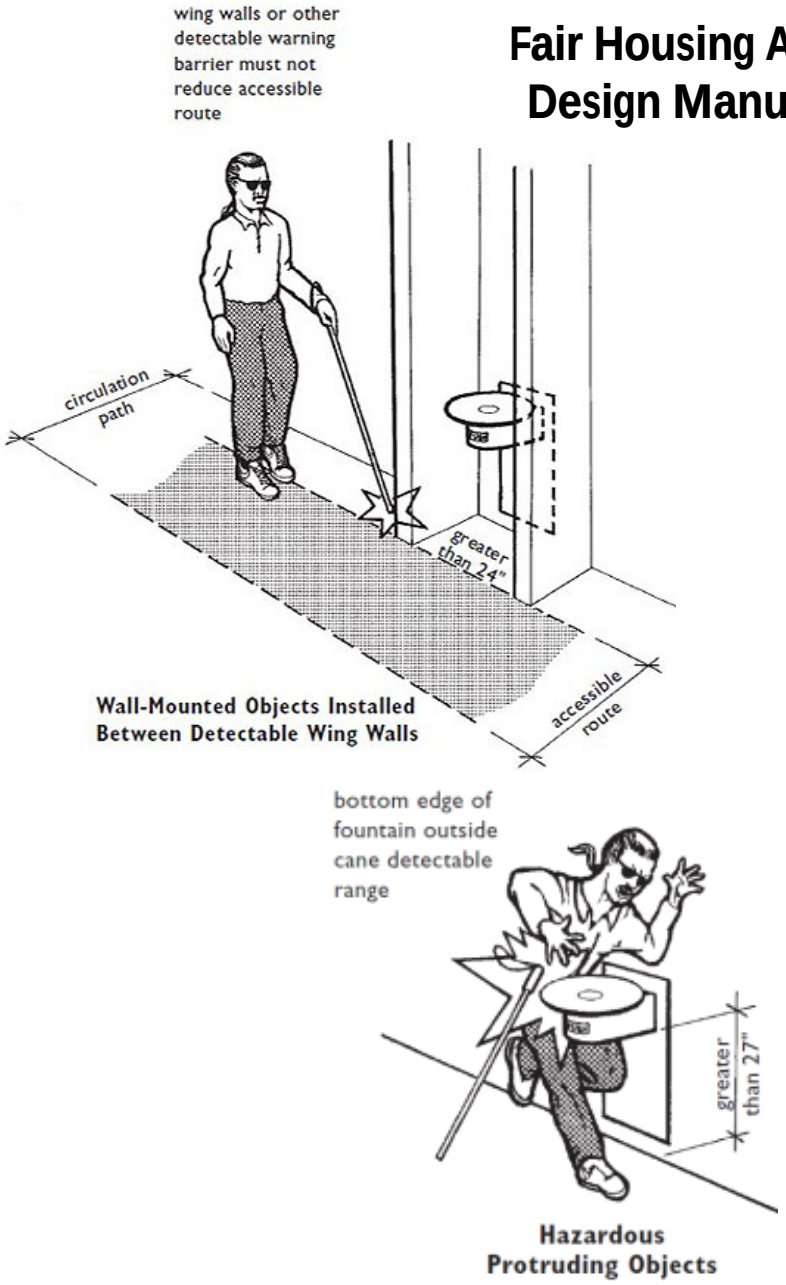

Relationship with Accessible Route

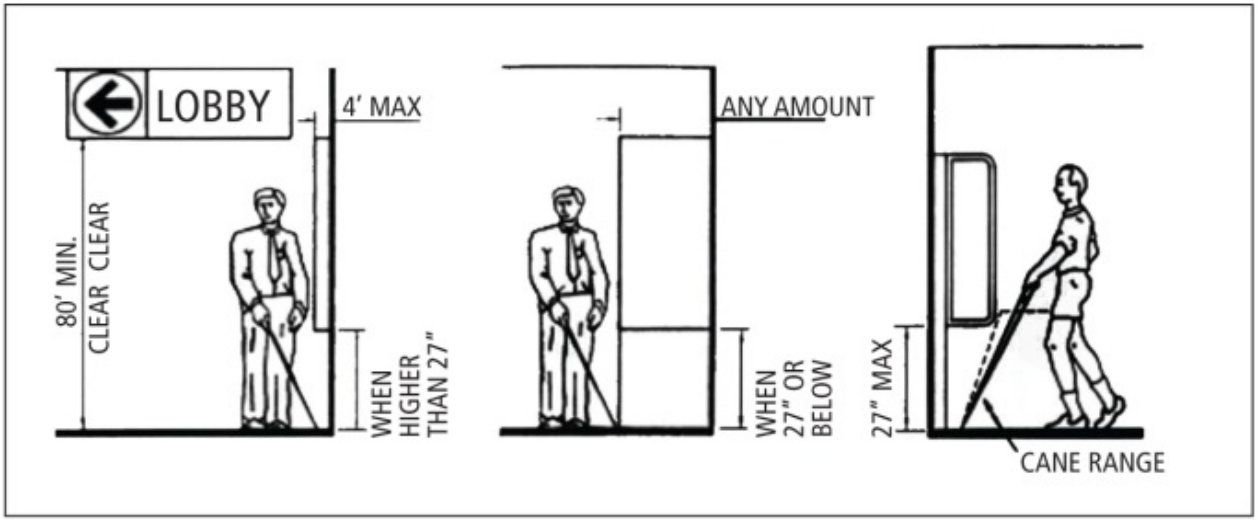

2010 ADA Standards for Accessible Design

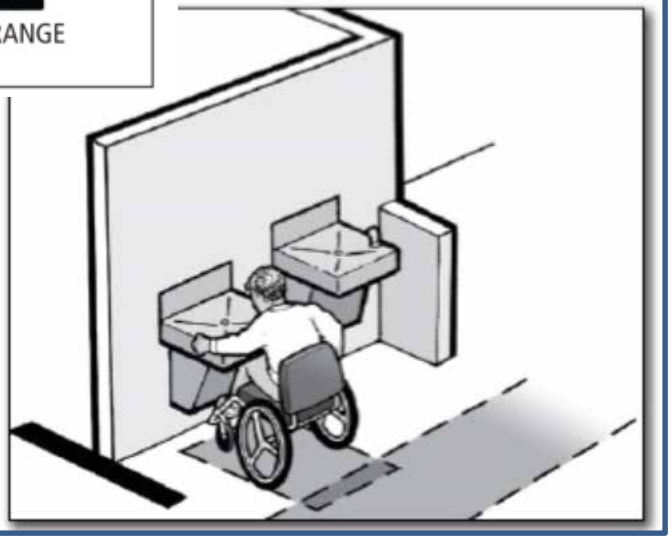

Vision impaired individuals are at serious risk when an obstruction exists, such as an intruding drinking fountain along an accessible route. Recessed fountains are preferable.

ICC A117.1-2009

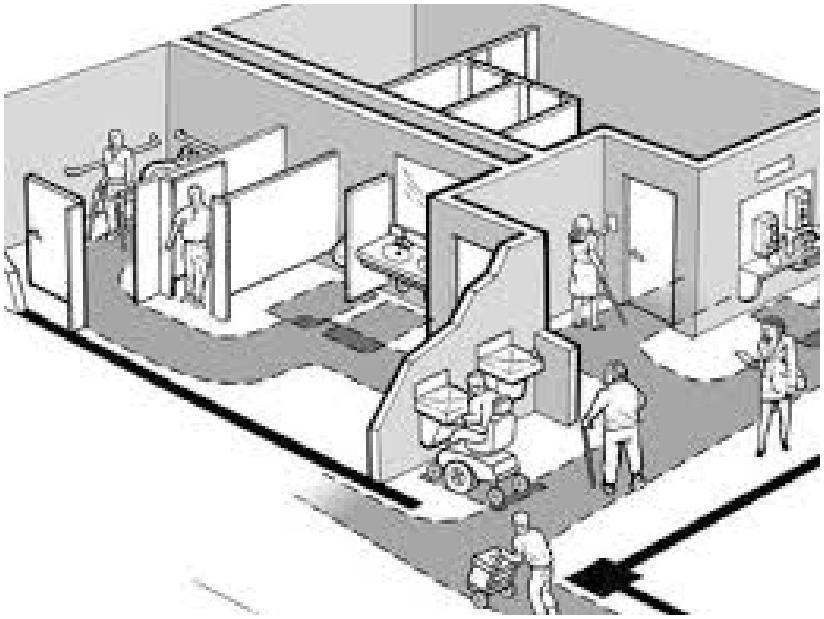

At least 50% of drinking fountains provided should be accessible.

Fair Housing Act Design Manual

At least 50% of drinking fountains provided should be accessible.

2010 ADA Standards for Accessible Design

A typical dual drinking fountain fixture in use. The accessible path of travel is still maintained.

The required number of water fountains is consistent among the codes/standards reviewed. All fountains should be located generally in the same location.

Section 8:
Visual Alarms

The placement of visual alarms in public spaces is not only an important accessible element, but the visual alarms also provide a necessary degree of safety for persons with hearing impairments. Building professionals should also note that the proper provision of visual alarms provides building professionals with protection against possible liability/litigation issues.

All visual alarms used by building professionals should adhere to the standards set forth in the latest edition of the National Fire Protection Association Code. Inspectors and plan reviewers should insist that details of these devices are always specified on construction documents.

Comparison of ICC, Fair Housing, and ADA Standards

Visual Alarms	ICC A117.1-2009	Pages	Fair Housing Act Design Manual	Pages	2010 ADA Standards for Accessible Design	Section	Comments
Location and Why They are Needed	Lighting controls, electrical panel boards, electrical switches and receptacle outlets, environmental controls, appliance controls, operating hardware for operable windows, plumbing fixture controls, and user controls for security or intercom systems shall comply with Section 309.	65	Alarms must have audible and visual features compliant with ANSI 117.1 Section 4.26.	21, A-8	Where a clear floor space complying with Section 305 allows a parallel approach to an element and the edge of the clear floor space is 10 inches (255 mm) maximum from the element, the high side reach shall be 48 inches (1220 mm) maximum and the low side reach shall be 15 inches (380 mm) minimum above the floor.	215.1, 702	**Consistent standards with NFPA 72 (1999 or 2002 edition) are referenced in each. The Fair Housing Publication provides a good explanation.**

ICC A117.1-2009

Consistent standards with NFPA 72 (1999 or 2002 edition) are referenced.

Fair Housing Act Design Manual

Consistent standards with NFPA 72 (1999 or 2002 edition) are referenced.

2010 ADA Standards for Accessible Design

Most fire alarm designers consider NFPA 72-1999, 'National Fire Alarm Code' as 'equivalent facilitation' to comply with the ADA. The requirements found in NFPA 72 exceed the minimum requirements found in the ADAAG.

In case of an emergency, visual fire alarms can be the difference between life and death. The standards are also consistent with the NFPA 72 (1999 or 2002 edition).

Section 9:
Light Fixtures

Both the location and type of light fixtures provided in a construction project are of great importance to someone with limited dexterity or in a wheelchair. This reference manual provides guidance on these items, both in provision of the code sections and also with helpful illustrations.

When considering the placement of light fixtures, the reach requirements for both forward and side approach should be considered. The building professional should consider both convenience and safety when planning the proper location of these items.

Care should be given—particularly in the proper placement of fixtures in kitchen and bathrooms—to avoid conflicts that could compromise safety and lead to accidents. Light fixtures should never be located in a position that requires a reach over a hot surface.

Comparison of ICC, Fair Housing, and ADA Standards

Light Fixtures	ICC A117.1-2009	Pages	Fair Housing Act Design Manual	Pages	2010 ADA Standards for Accessible Design	Section	Comments
Types Required	Lighting controls, electrical panel boards, electrical switches and receptacle outlets, environmental controls, appliance controls, operating hardware for operable windows, plumbing fixture controls, and user controls for security or intercom systems shall comply with Section 309.	93	Recommended by not required: the most universally usable switches are rocker switches, toggle switches, and touch type electronic switches because they can be operated by a single touch, require little force, and do not require gripping, twisting, or fine finger dexterity.	5.1, 5.9	Operable parts shall be operable with one hand and shall not require tight grasping, pinching, or twisting of the wrist. The force required to activate operable parts shall be 5 pounds (22.2 N) maximum.	309.4	**Limited information on types required is provided, but location and accessiblity are noted.**
Placement of Fixtures	Where a clear floor space complying with Section 305 allows a parallel approach to an element and the edge of the clear floor space is 10 inches (255 mm) maximum from the element, the high side reach shall be 48 inches (1220 mm) maximum and the low side reach shall be 15 inches (380 mm) minimum above the floor.	91, 13, 14	References AINSI 117.1 for fixture location.	5.1, 5.9	Operable parts shall be placed within one or more of the reach ranges specified in 308.	309.3	**The accessible reach standards are used for each code.**

ICC A117.1-2009

"Rocker" switches are a good option for accessibility, especially for individuals who have limited dexterity.

Fair Housing Act Design Manual

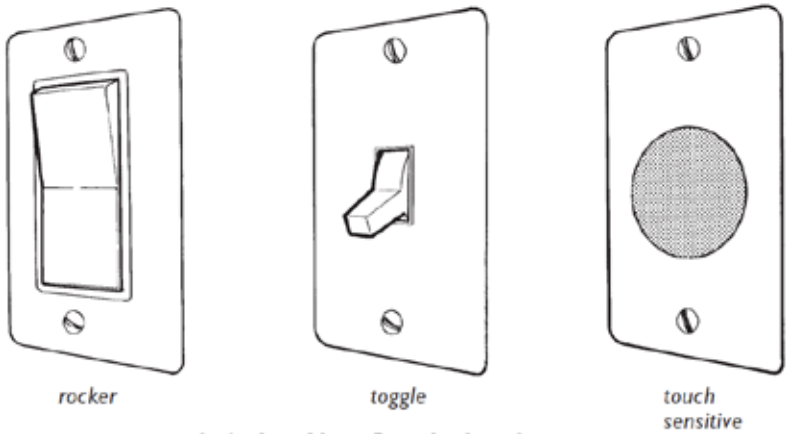

Switches Most People Can Operate

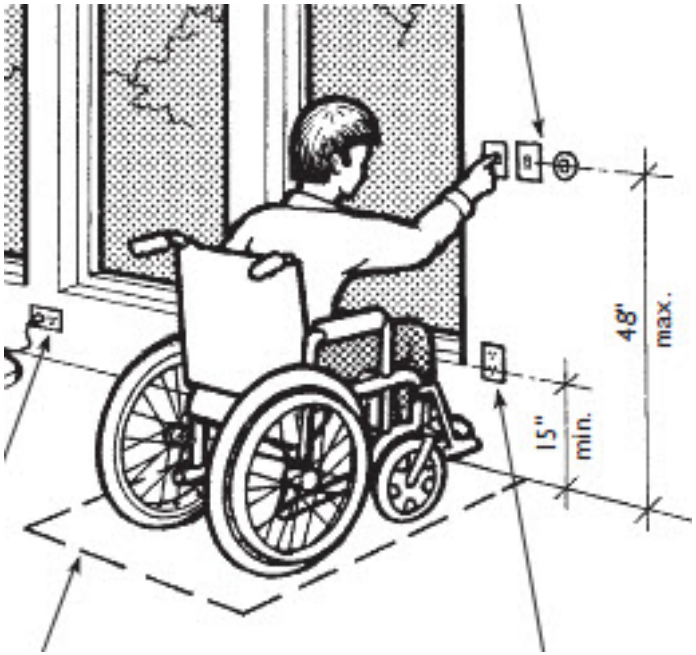

2010 ADA Standards for Accessible Design

Toggle switch- more finger force required

Plate rocker switch- less force and no grip required

The different types of light fixtures have increased in recent years as Universal Design features are increasingly utilized by contractors. Individuals with limited use of upper extremities have significantly benefited from these modifications.

ICC A117.1-2009

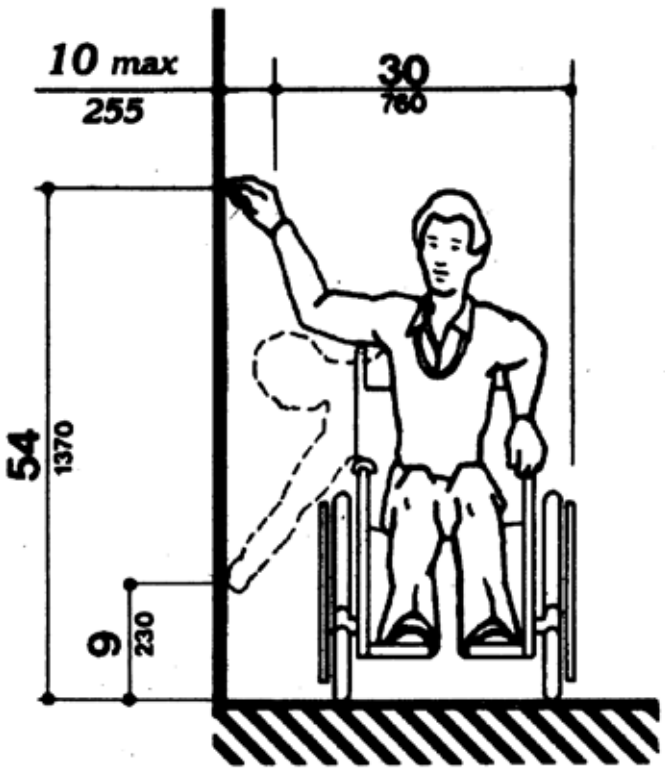

Reach requirements correspond to the recommended placement of fixtures (side reach).

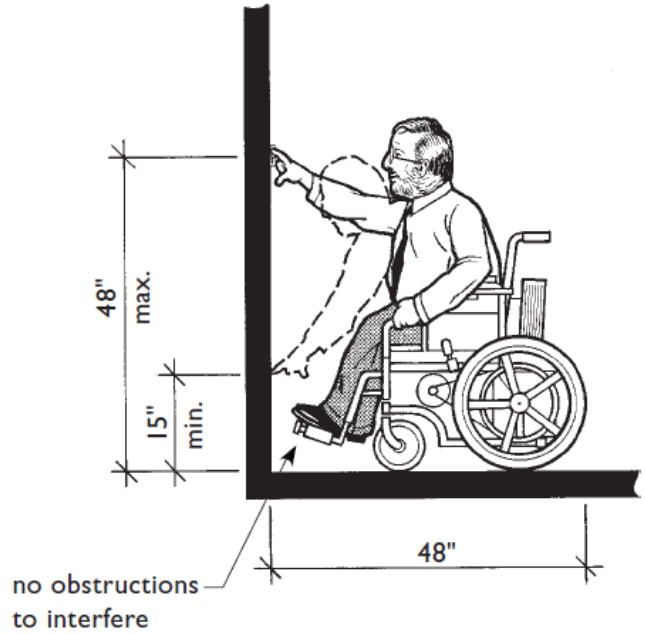

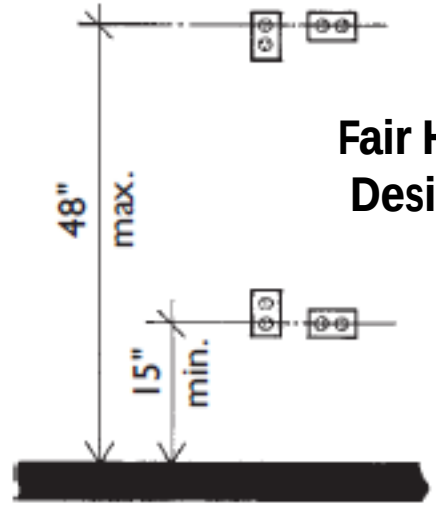

Fair Housing Act Design Manual

Mounting Height for Outlets

2010 ADA Standards for Accessible Design

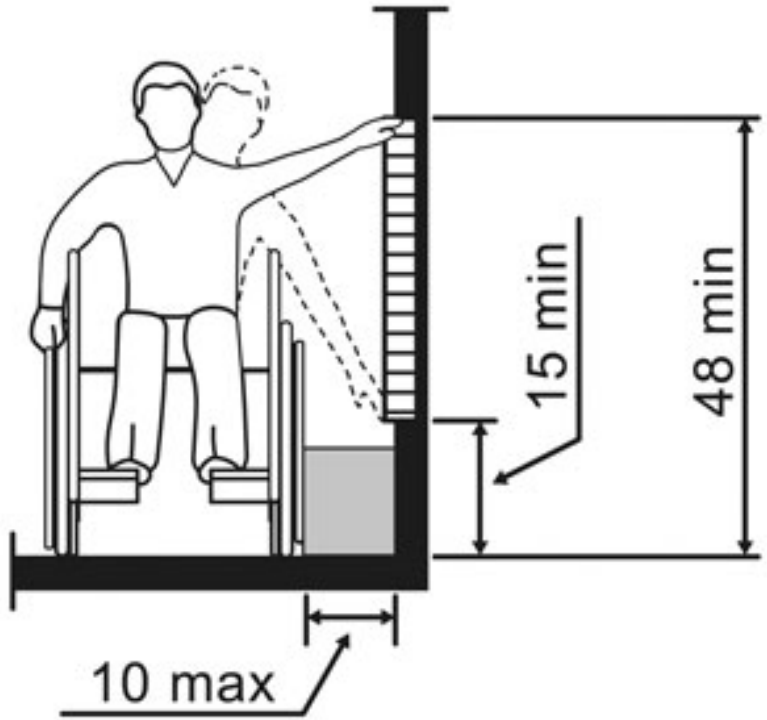

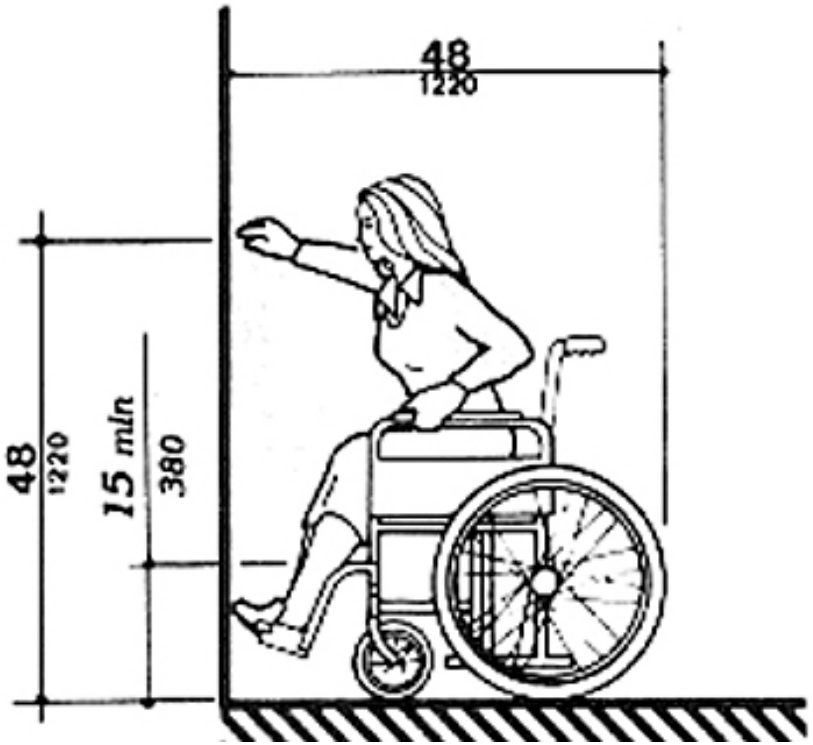

48” optimal height

Specified placement of light fixtures is based on the reach accessibility requirements and is consistent with all three reviewed codes/standards.

Section 10:
Kitchens

Accessibility features incorporated in kitchens are extremely helpful and useful. Kitchen design elements include counter tops, sinks, cabinets, fixtures, and turning specifications.

Since kitchens are not all the same dimensions, this section provides guidance on the proper configurations for various kitchen arrangements and reviews several of the variations among the code standards.

Fortunately, numerous accessible sink and fixture products are now readily available on the market. The installation of these products in conjunction with counter top height and configuration is very important to ensure an accessible design. The turning radius in an accessible kitchen is also a critical design element and is reviewed in this section of the reference manual.

Building professionals should strive to ensure that counter tops, plumbing and light fixtures, and appliance controls are strategically placed to maximize accessibility.

Comparison of ICC, Fair Housing, and ADA Standards

Kitchens	ICC A117.1-2009	Pages	Fair Housing Act Design Manual	Pages	2010 ADA Standards for Accessible Design	Section	Comments
Counter Tops	At least one work surface shall be provided in accordance with Section 902.	81, 82	The Guidelines require a clearance of at least 40 inches between all opposing base cabinets, countertops, appliances, and walls. The 40-inch clearance is measured from any countertop or the face of any appliance (excluding handles and controls) that projects into the kitchen to the opposing cabinet, countertop, appliance, or wall.	7.7	Where provided, at least one of each type of sales counter and service counter shall comply with 904.4. Where counters are dispersed throughout the building or facility, counters complying with 904.4 also shall be dispersed.	226.3	**The 26 minimum and 30 maximum is consistent through the codes with several variations for kitchen type.**
Sinks	The sink shall comply with Section 606. A clear floor space complying with Section 305.3, positioned for forward approach, shall be provided. Knee and toe clearance complying with Section 306 shall be provided.	81, 82, 54	ANSI 4.32.5.5	7.14	Lavatories and sinks shall comply with 606. Lavatories and sinks shall be installed with the front of the higher of the rim or counter surface 34 inches (865 mm) maximum above the finish floor or ground.	606	**The code standards are consistent. The Fair Housing Publication is more illustrative and offers more options for kitchen configurations.**

Comparison of ICC, Fair Housing, and ADA Standards

Kitchens	ICC A117.1-2009	Pages	Fair Housing Act Design Manual	Pages	2010 ADA Standards for Accessible Design	Section	Comments
Cabinets	Within kitchens and bathrooms, lighting controls, electrical switches and receptacle outlets are permitted to be located over cabinets with counter tops 36 inches (915 mm) maximum in height and 25 1/2 inches (650 mm) maximum in depth.	99	ANSI 4.32.5.5	7.14	Where storage is provided in accessible spaces, at least one of each type shall comply with 811.	225.2	**The code standards are consistent. The reach requirements that are detailed in each code are used.**
Fixtures	The location of controls shall not require reaching across burners.	81, 82	While not required by the Guidelines, careful consideration should be given to the selection of other appliances and fixtures installed in kitchens so potential residents who may currently, or in the future, have a physical limitation may more completely use and enjoy their dwelling.	7.2-7.30	Dining surfaces include, but are not limited to, bars, tables, lunch counters, and booths. Examples of work surfaces include writing surfaces, study carrels, student laboratory stations, baby changing and other tables or fixtures for personal grooming, coupon counters, and where covered by the ABA scoping provisions, employee work stations.	902.1	**The reach standards are used as noted above. Grasping and accessibility standards are noted.**

Comparison of ICC, Fair Housing, and ADA Standards

Kitchens	ICC A117.1-2009	Pages	Fair Housing Act Design Manual	Pages	2010 ADA Standards for Accessible Design	Section	Comments
Turning Specifications	A turning space complying with Section 304 shall be provided within the room.	81, 82	The Guidelines 1) specify minimum clear floor spaces at fixtures and appliances, 2) define minimum clearance between counters, and 3) provide additional specifications when a U-shaped kitchen is planned. Wheelchair turning spaces, described in accessibility standards, are not required in kitchens that meet the Guidelines, except in some U-shaped kitchens, see page 7.9.	7.3	Kitchens within housing units containing accessible sleeping rooms with mobility features (including suites and clustered sleeping rooms) or on floors containing accessible sleeping rooms with mobility features shall provide turning spaces that comply with section 809.2.2 of the 2010 Standards and kitchen work surfaces that comply with section 804.3 of the 2010 Standards.	809.2.2	**The codes are consistent with the 40-60 inch clearance used. Certain exceptions of 30 inches are mentioned in the Fair Housing Publication.**

ICC A117.1-2009

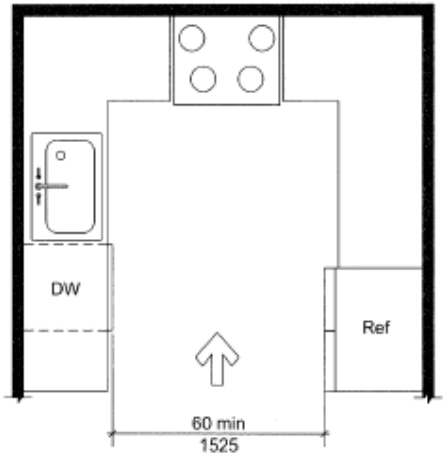

FIG. 1003.12.1.2
U-SHAPED KITCHEN CLEARANCE IN TYPE A UNITS

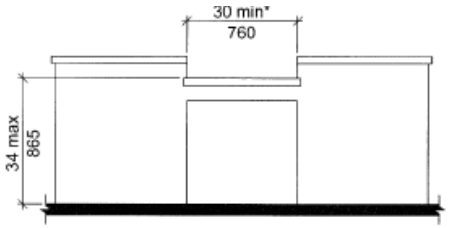

* 36 min. (915) if part of T-shaped turning space per Sections 304.3.2 and 1003.3.2

FIG. 1003.12.3
WORK SURFACE IN KITCHEN FOR TYPE A UNITS

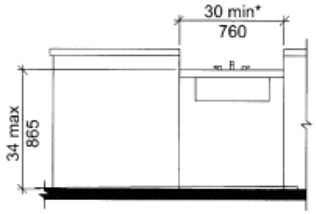

* 36 min. (915) if part of T-shaped turning space per Sections 304.3.2 and 1003.3.2

FIG. 1003.12.4
KITCHEN SINK FOR TYPE A UNITS

Fair Housing Act Design Manual

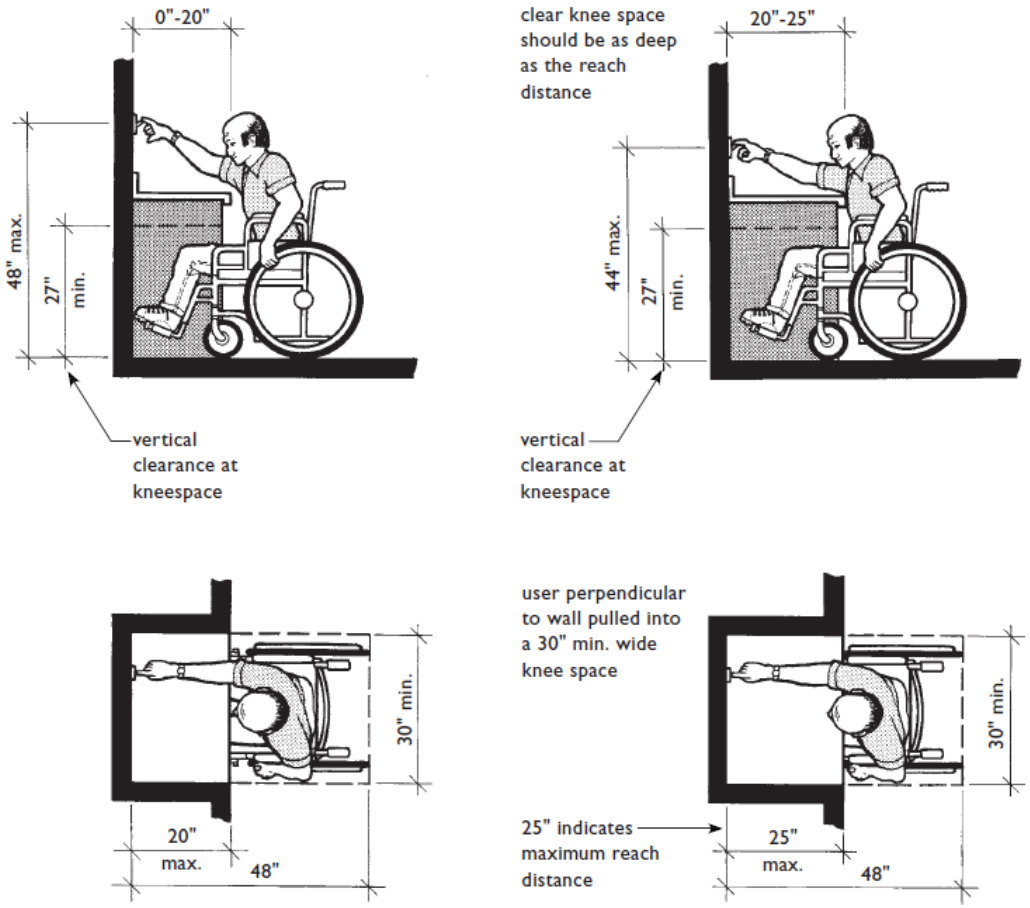

Maximum Forward Reach
(From a Perpendicular Approach) over an Obstruction

2010 ADA Standards for Accessible Design

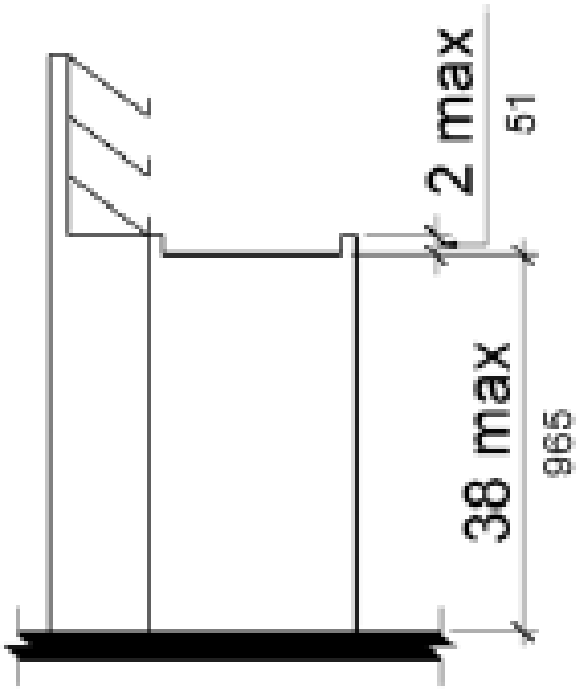

The 26” minimum/30” maximum is consistent throughout the codes, with several variations for kitchen configuration.

ICC A117.1-2009

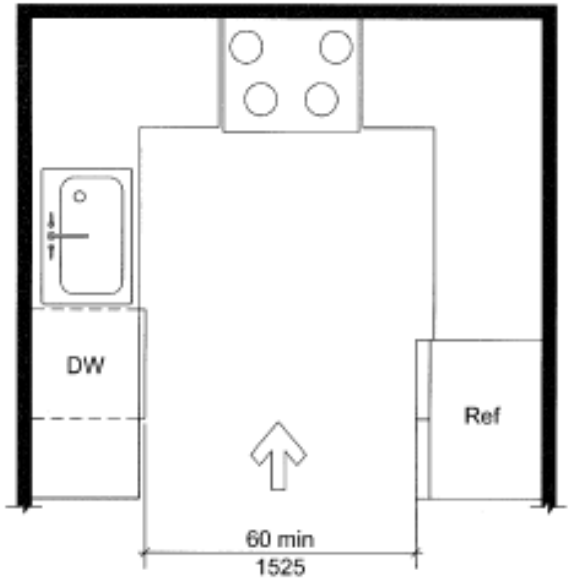

FIG. 1004.12.1.2
U-SHAPED KITCHEN CLEARANCE IN TYPE B UNITS

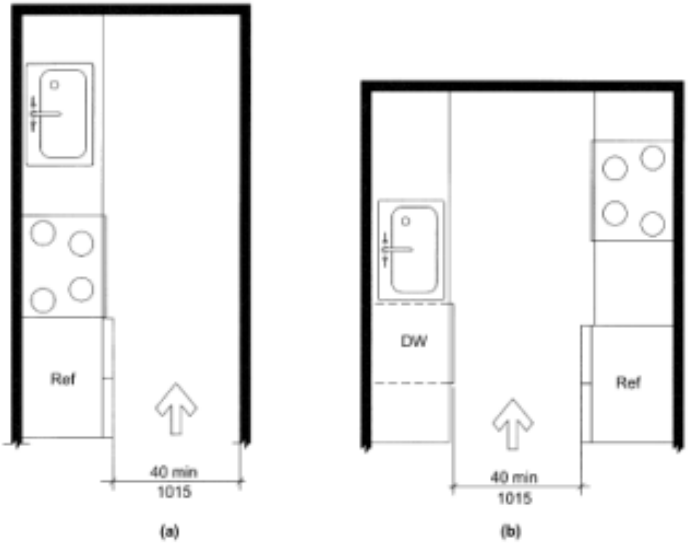

FIG. 1004.12.1.1
MINIMUM KITCHEN CLEARANCE IN TYPE B UNITS

Fair Housing Act Design Manual

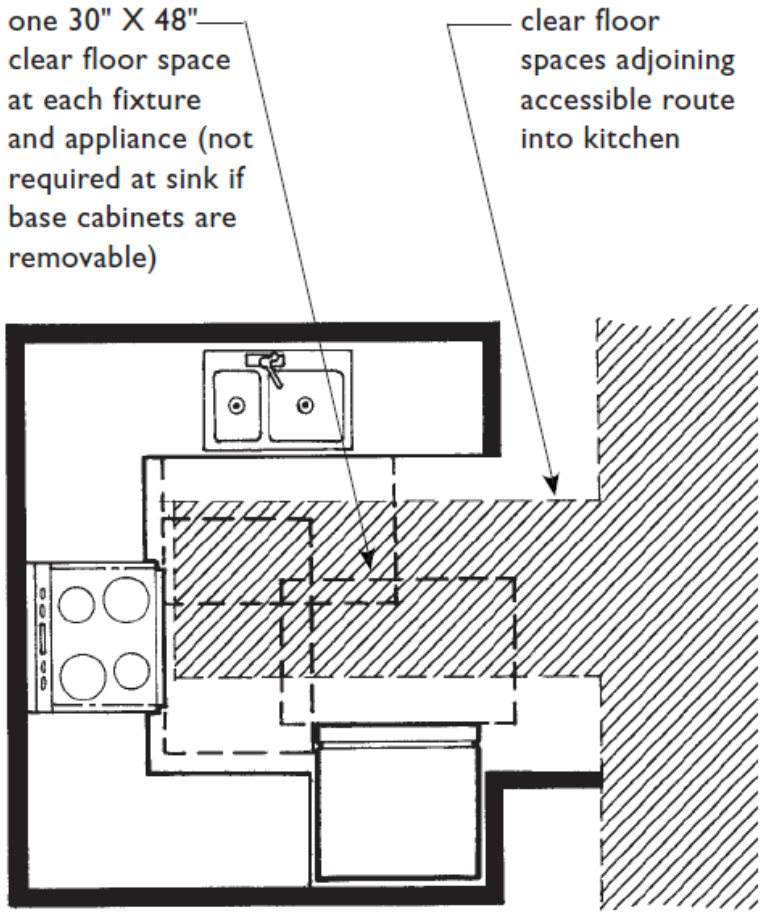

Overlapping Clear Floor Spaces and Accessible Route Provide Maneuvering Space

2010 ADA Standards for Accessible Design

All three codes/standards are consistent. The Fair Housing Publication is more illustrative and offers more options for a kitchen. Leg room and insulation of plumbing are crucial components.

ICC A117.1-2009

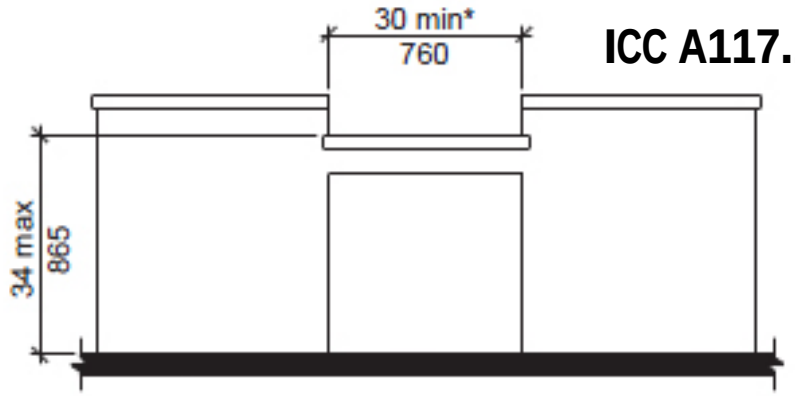

* 36 min. (915) if part of T-shaped turning space per Sections 304.3.2 and 1003.3.2

FIG. 1003.12.3
WORK SURFACE IN KITCHEN FOR TYPE A UNITS

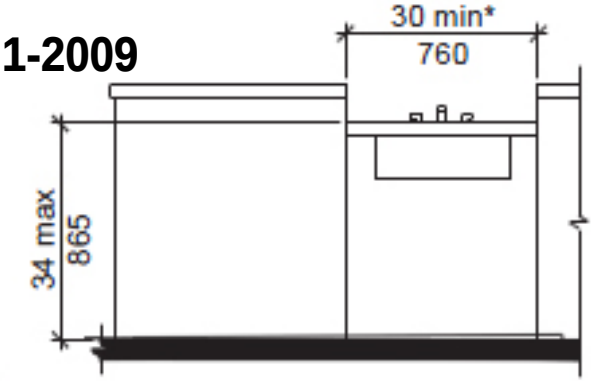

* 36 min. (915) if part of T-shaped turning space per Sections 304.3.2 and 1003.3.2

FIG. 1003.12.4
KITCHEN SINK FOR TYPE A UNITS

Fair Housing Act Design Manual

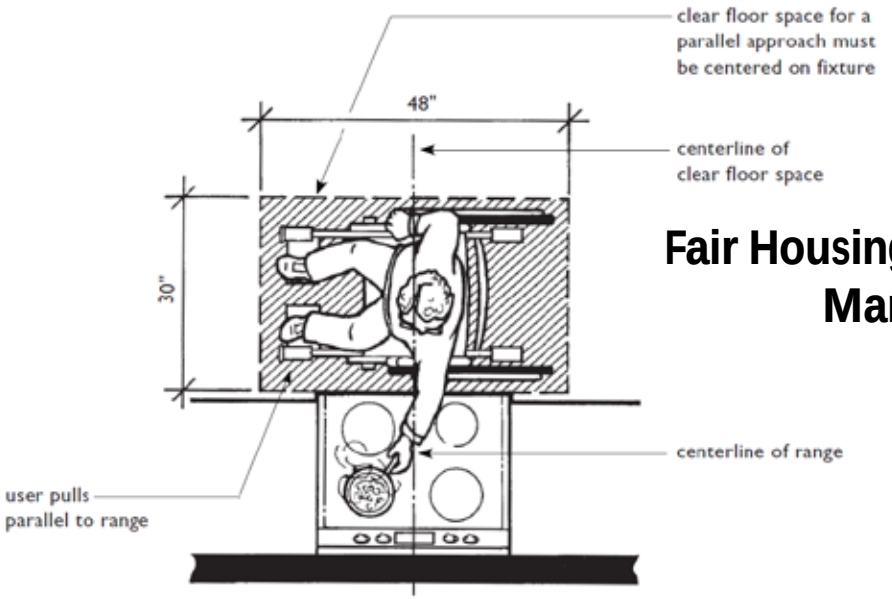

Space for Parallel Approach Required at Range and Cooktop

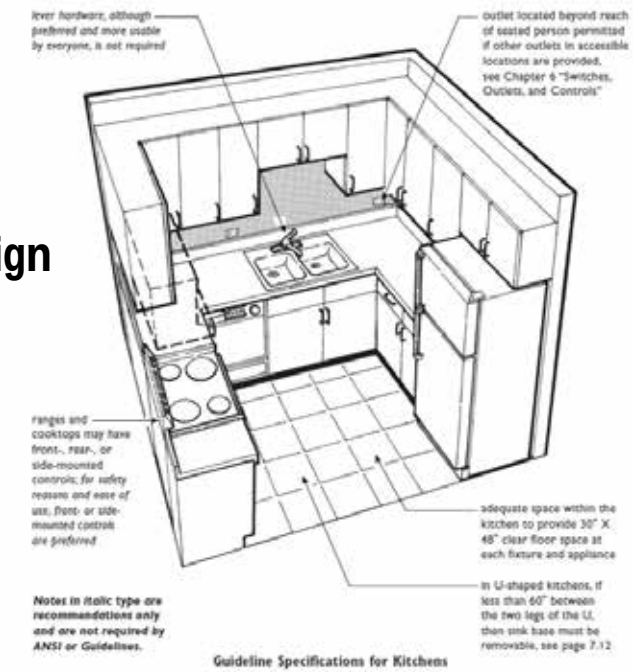

Guideline Specifications for Kitchens

2010 ADA Standards for Accessible Design

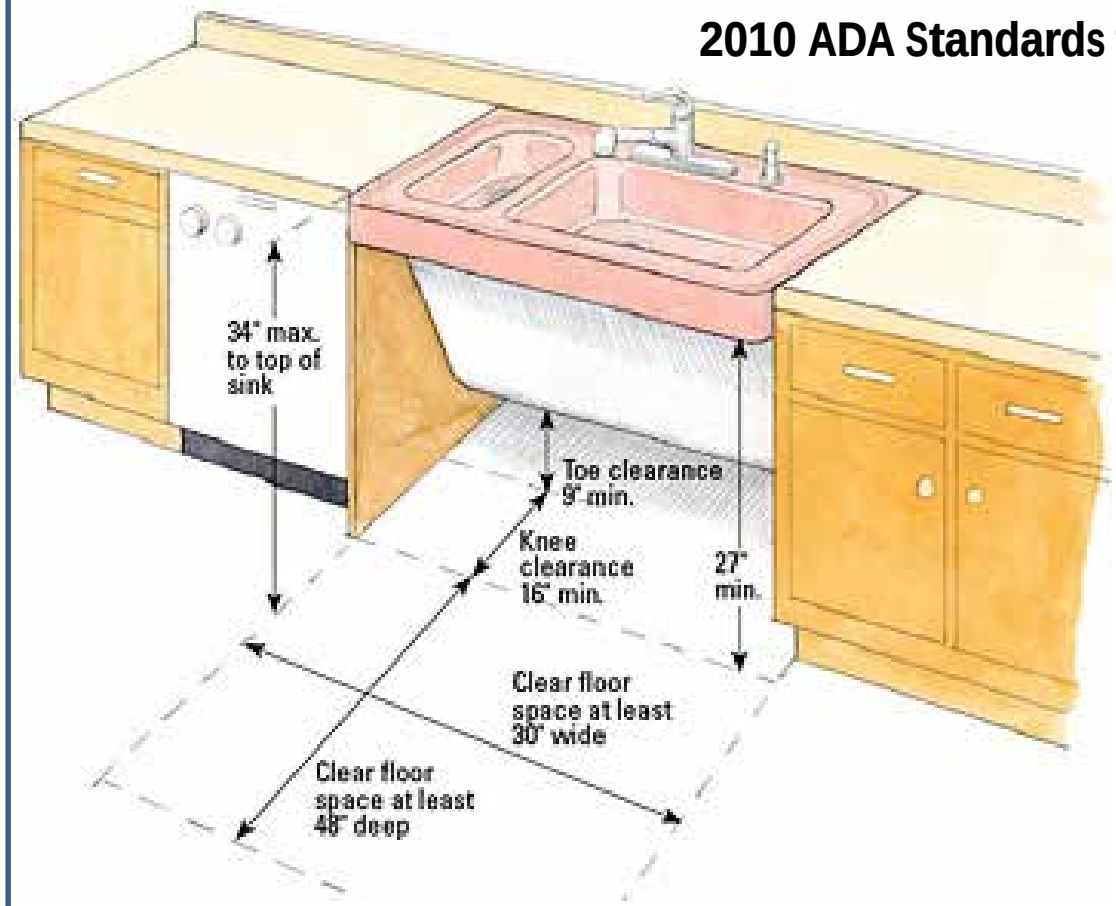

Reach requirements are a critical element in these standards. Care should be taken to avoid requiring a person in a wheelchair to reach for a cabinet that is located over a hot stove.

ICC A117.1-2009

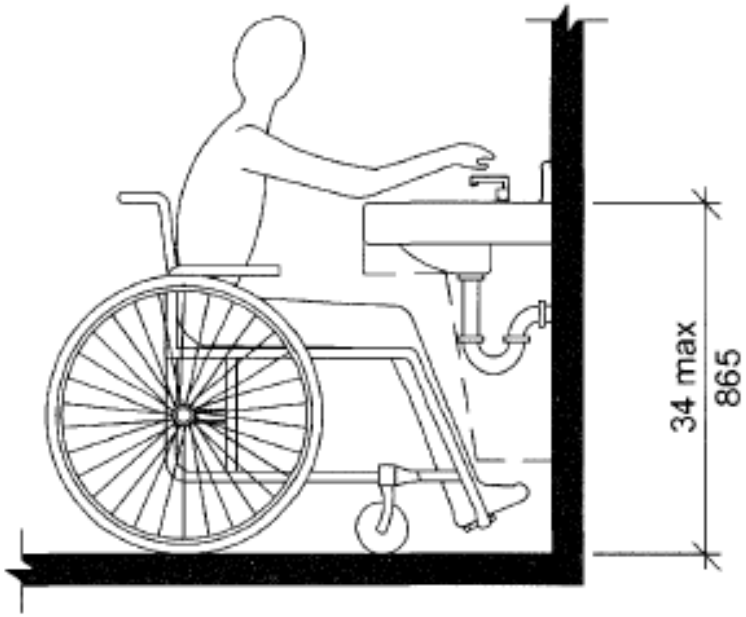

FIG. 606.3
HEIGHT OF LAVATORIES AND SINKS

Fair Housing Act Design Manual

Knee Space at Sink with Pipe Protection Panel

sinks with rear located drain are not required but are a significant advantage when creating usable knee space

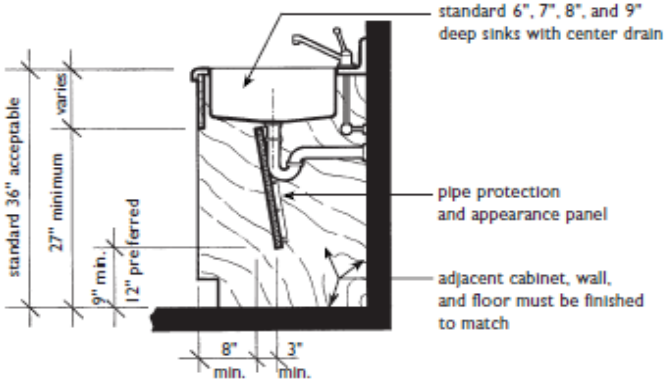

Knee Space at Sink with Wrapped Pipes

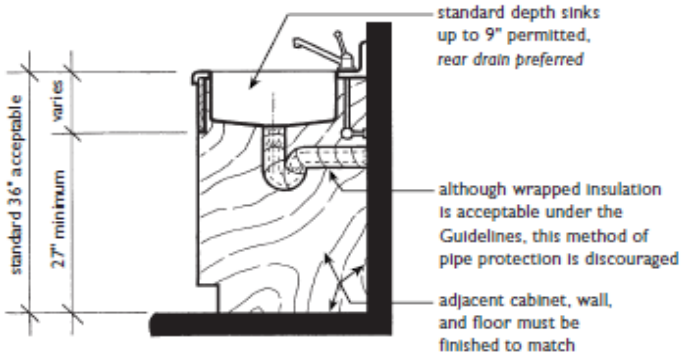

Knee Space at Sink with Garbage Disposal and Pipe Protection Panel

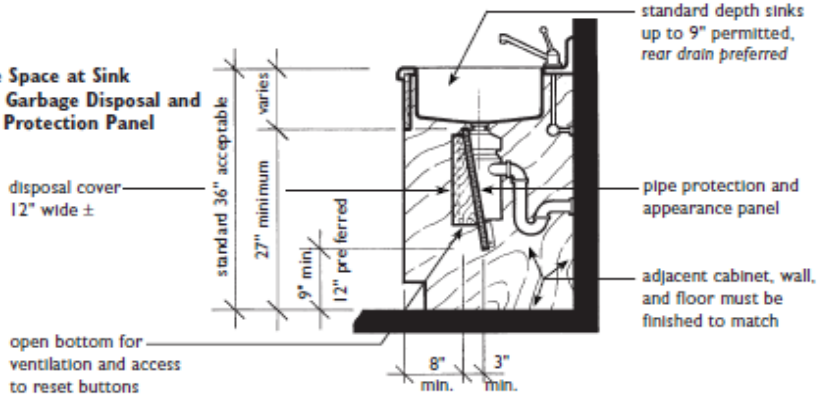

2010 ADA Standards for Accessible Design

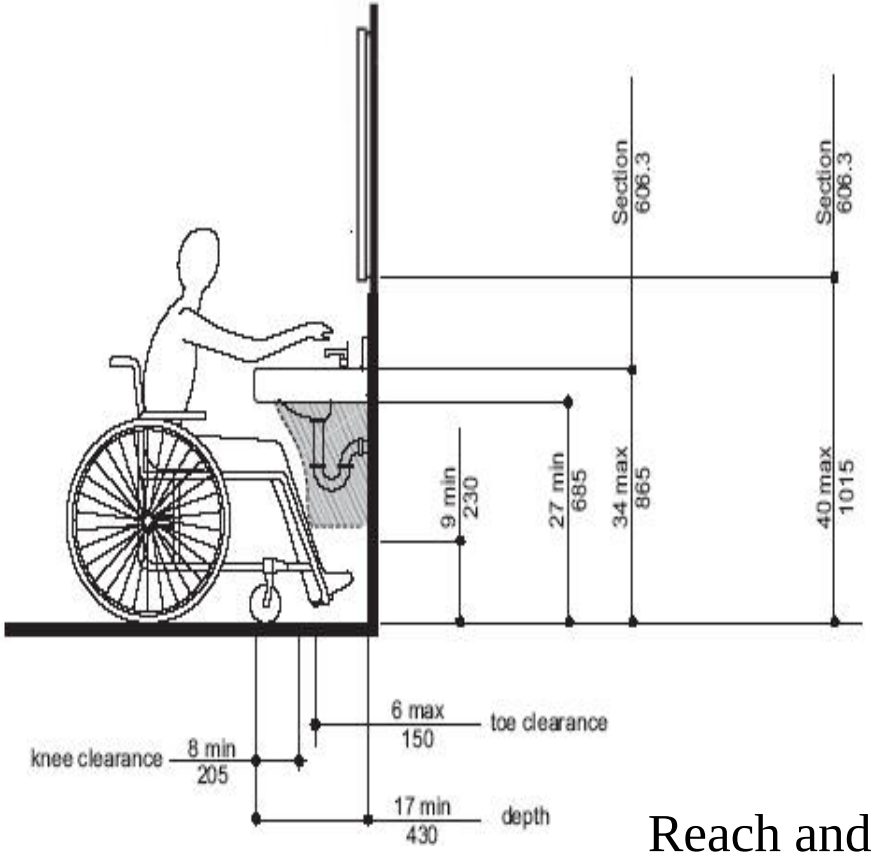

Reach and clearance requirements are applied in the location of plumbing fixtures. Ease of use and grasping ability are important aspects of these standards.

ICC A117.1-2009

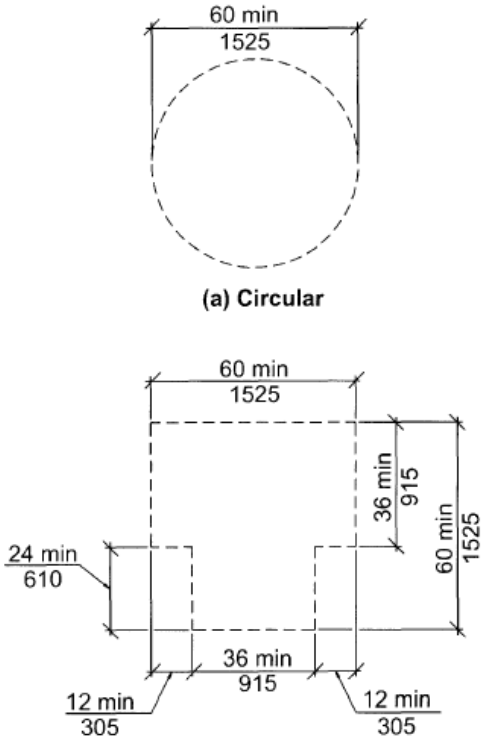

FIG. 304.3
SIZE OF TURNING SPACE

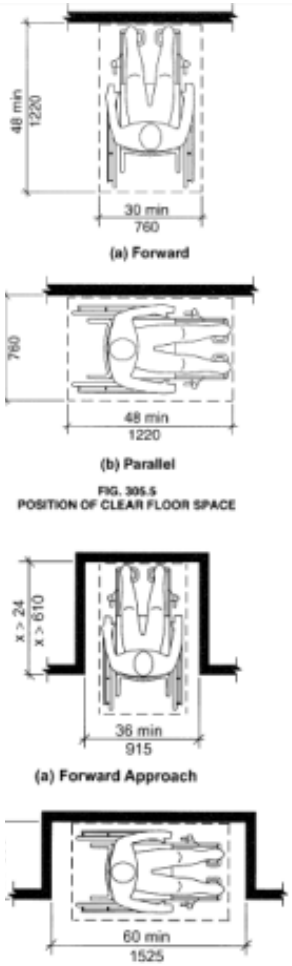

FIG. 305.5
POSITION OF CLEAR FLOOR SPACE

FIG. 305.7
MANEUVERING CLEARANCE IN AN ALCOVE

Fair Housing Act Design Manual

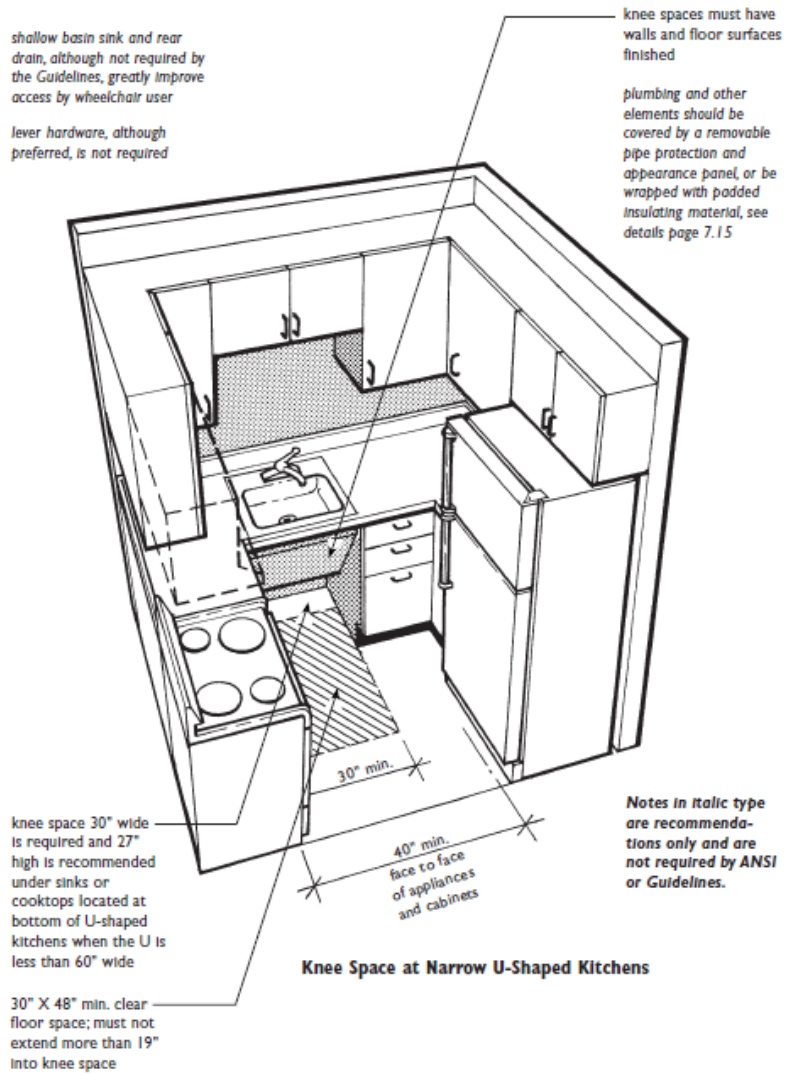

Knee Space at Narrow U-Shaped Kitchens

2010 ADA Standards for Accessible Design

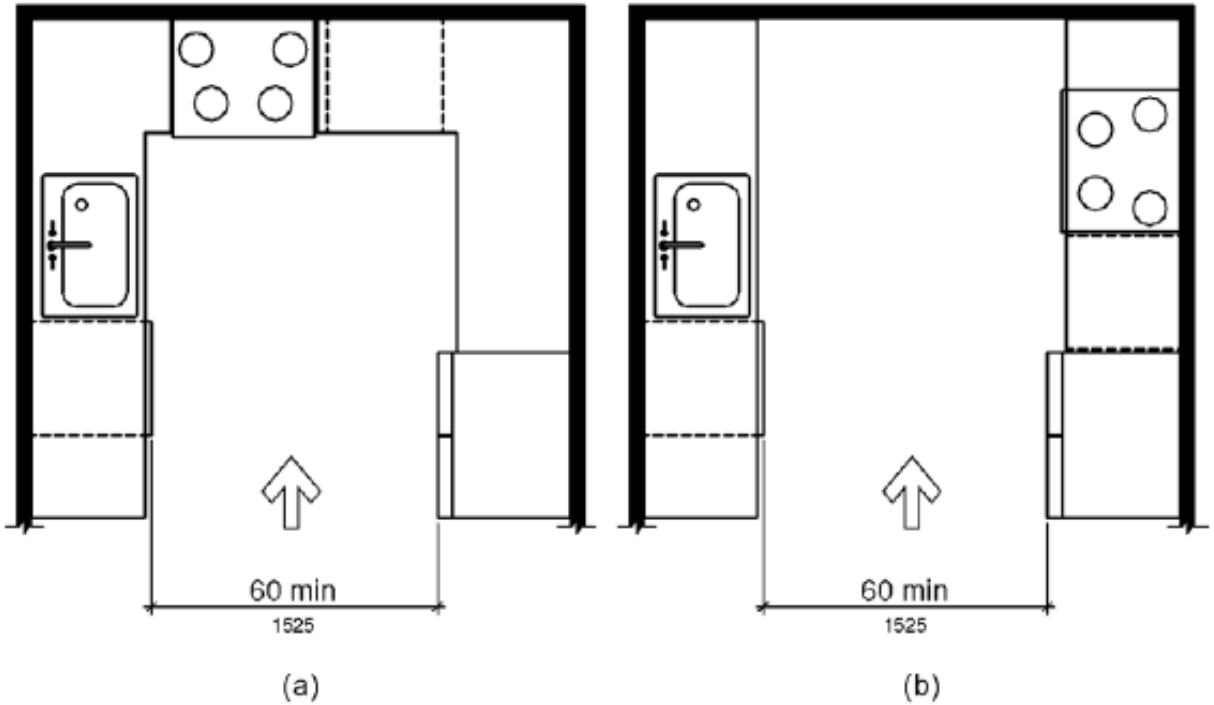

The codes/standards are consistent with 40-60 inch clearance used. Certain exceptions of 30 inches are mentioned in the Fair Housing Publication.

Section 11:
Reach Ranges

In nearly every section of this accessibility reference manual, standards concerning reach ranges are discussed and referenced. From the location of light fixtures to the installation of drinking fountains, reach ranges must constantly be considered to allow adequate accessibility.

Forward reaches, side reaches, and obstructed/unobstructed reaches are of particular concern and require vigilance on the part of building professionals.

Numerous parallels exist among the reviewed standards and the required placement of accessibility features. Reach ranges are critically important within homes, places of employment, and in schools. Building professionals should be particularly sensitive to these standards when designing or reviewing construction plans.

Comparison of ICC, Fair Housing, and ADA Standards

Reach Ranges	ICC A117.1-2009	Pages	Fair Housing Act Design Manual	Pages	2010 ADA Standards for Accessible Design	Section	Comments
Forward Reaches	Where a high forward reach is over an obstruction, the clear floor space complying with Section 305 shall extend beneath the element for a distance not less than the required reach depth over the obstruction. The high forward reach shall be 48 inches (1220 mm) maximum above the floor where the reach depth is 20 inches (510mm) maximum.	13, 14	A minimum 30-inch wide clear knee space as deep as the reach distance, adjoining a 36 inch wide accessible route, must be available below the counter/obstruction to allow a person using a wheelchair to pull up and execute a forward reach over the obstruction.	5.3, 5.4	Where a forward reach is unobstructed, the high forward reach shall be 48 inches (1220 mm) maximum and the low forward reach shall be 15 inches (380 mm) minimum above the finish floor or ground.	308.2	**The reach guidelines are consistent with all three codes.**

Comparison of ICC, Fair Housing, and ADA Standards

Reach Ranges	ICC A117.1-2009	Pages	Fair Housing Act Design Manual	Pages	2010 ADA Standards for Accessible Design	Section	Comments
Side reaches	Where a clear floor space complying with Section 305 allows a parallel approach to an element and the edge of the clear floor space is 10 inches (255 mm) maximum from the element, the high side reach shall be 48 inches (1220 mm) maximum and the low side reach shall be 15 inches (380 mm) minimum above the floor.	13, 14	A person using a wheelchair must be able to approach the cabinet from a position parallel to the cabinet and execute a side reach. This parallel position is made up of a 30-inch x 48-inch clear floor space adjoining a 36 inch wide minimum accessible route.	5.5	Where a clear floor or ground space allows a parallel approach to an element and the side reach is unobstructed, the high side reach shall be 48 inches (1220 mm) maximum and the low side reach shall be 15 inches (380 mm) minimum above the finish floor or ground.	308.3	**The reach guidelines are consistent with all three codes.**

Comparison of ICC, Fair Housing, and ADA Standards

Reach Ranges	ICC A117.1-2009	Pages	Fair Housing Act Design Manual	Pages	2010 ADA Standards for Accessible Design	Section	Comments
Obstructed and Unobstructed High Reaches	Where a forward reach is unobstructed, the high forward reach shall be 48 inches (1220 mm) maximum and the low forward reach shall be 15 inches (380 mm) minimum above the floor.	13, 14	Where there are no obstructions to interfere with the reach of a person using a wheelchair, controls and outlets may be mounted in a range from 15 to 48 inches above the floor.	5.6	Where a high forward reach is over an obstruction, the clear floor space shall extend beneath the element for a distance not less than the required reach depth over the obstruction. The high forward reach shall be 48 inches (1220 mm) maximum where the reach depth is 20 inches (510 mm) maximum. Where the reach depth exceeds 20 inches (510 mm), the high forward reach shall be 44 inches (1120 mm) maximum and the reach depth shall be 25 inches (635 mm) maximum.	308.2.2	**The reach guidelines are consistent with all three codes/standards.**

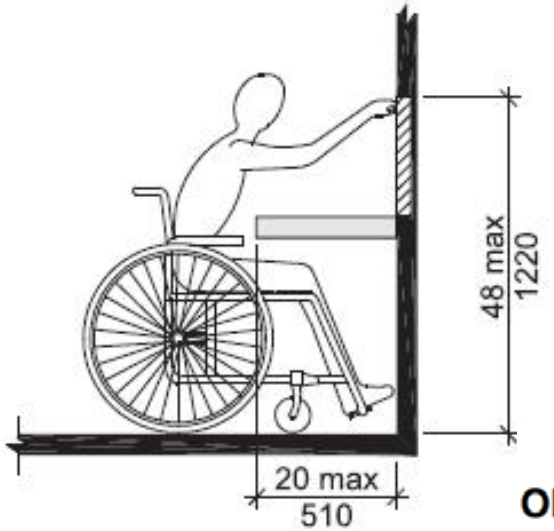

ICC A117.1-2009

Figure 308.2.2
Obstructed High Forward Reach

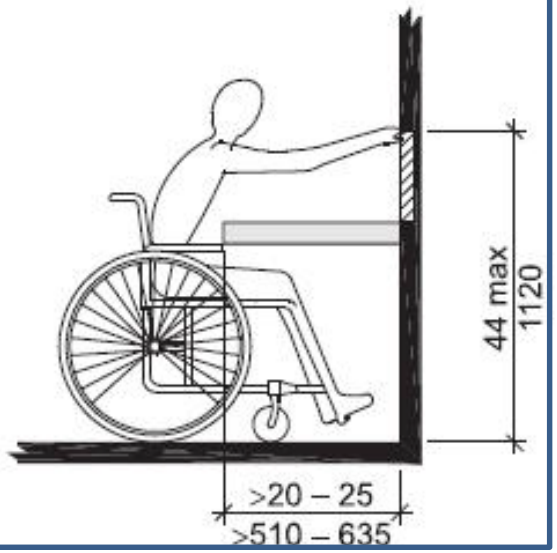

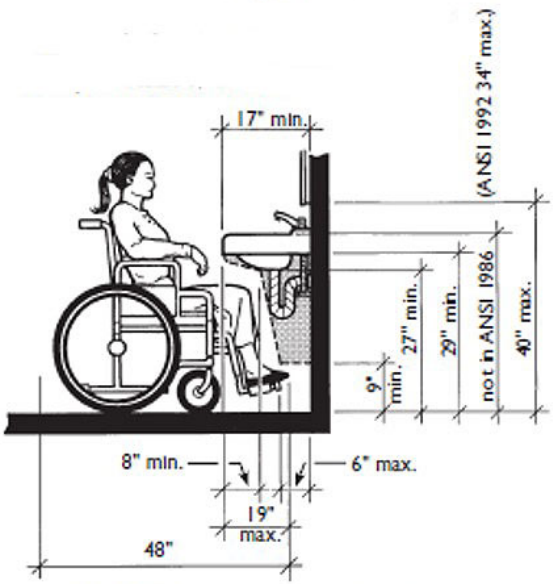

ANSI 1986 Requirements at Knee Space
(Guidance for Knee Space in A Bathrooms)

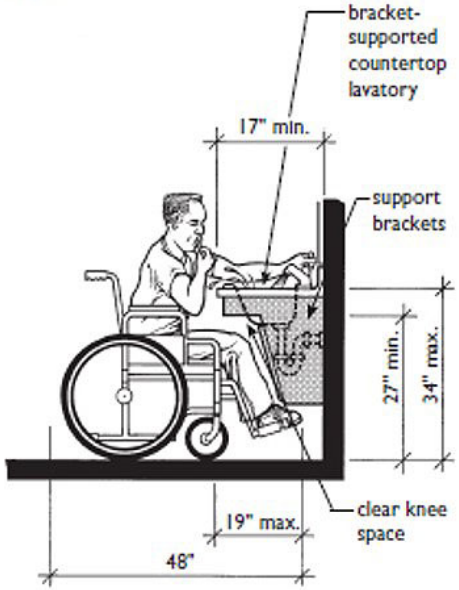

Knee Space at Lavatories that Meets the Requirements for B Bathrooms

Fair Housing Act Design Manual

2010 ADA Standards for Accessible Design

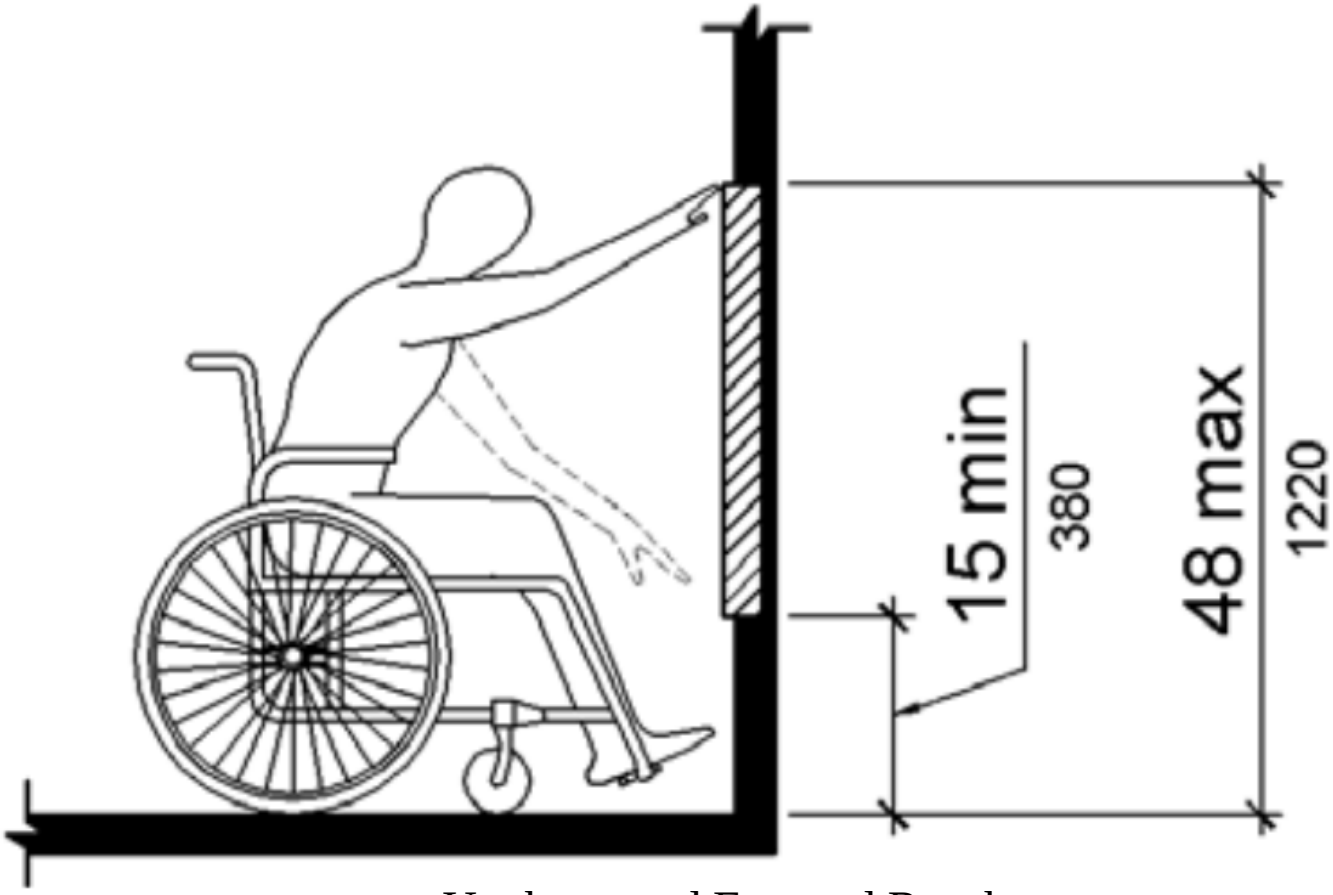

Unobstructed Forward Reach

The reach Requirements are consistent with the three codes/standards reviewed.

Side Reaches

ICC A117.1-2009

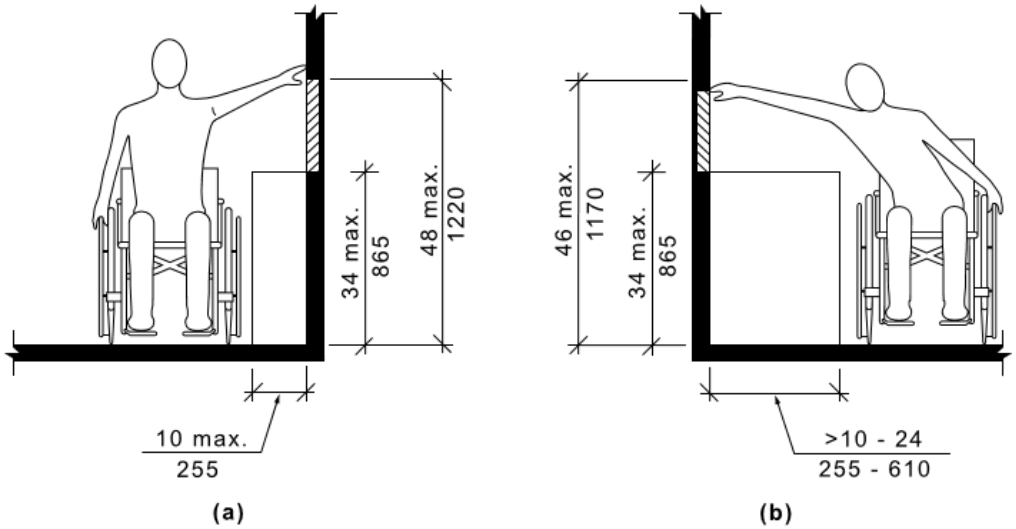

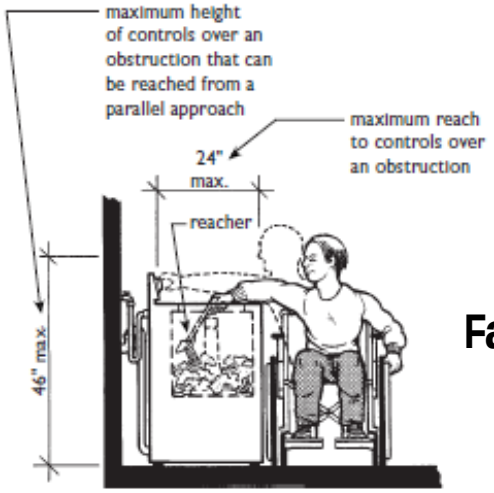

Use of Top-Loading Machine Made Possible With Assistance of a Mechanical Reacher

Fair Housing Act Design Manual

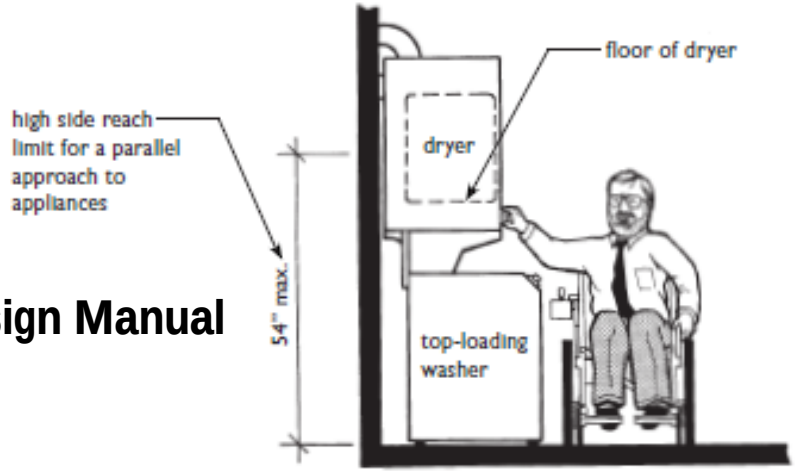

Stacked Washer/Dryer Unit with Dryer and All Controls Within Reach Range of Seated User

2010 ADA Standards for Accessible Design

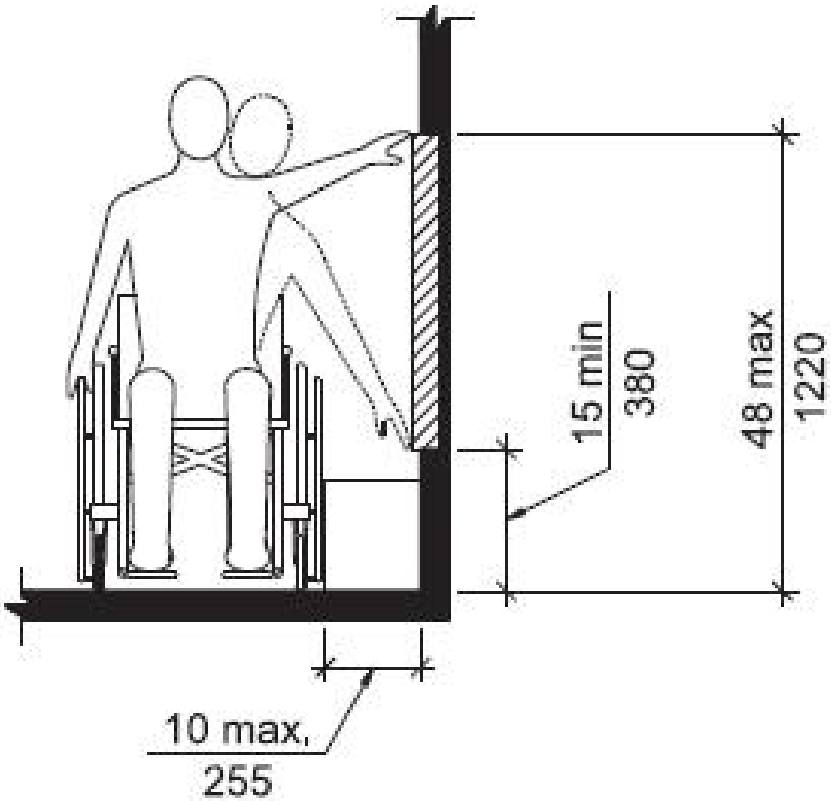

The reach requirements are consistent with the three codes/standards reviewed.

Unobstructed High Reaches

ICC A117.1-2009

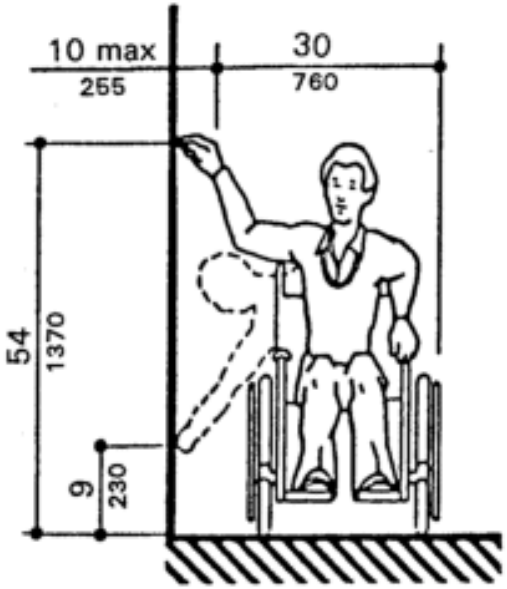

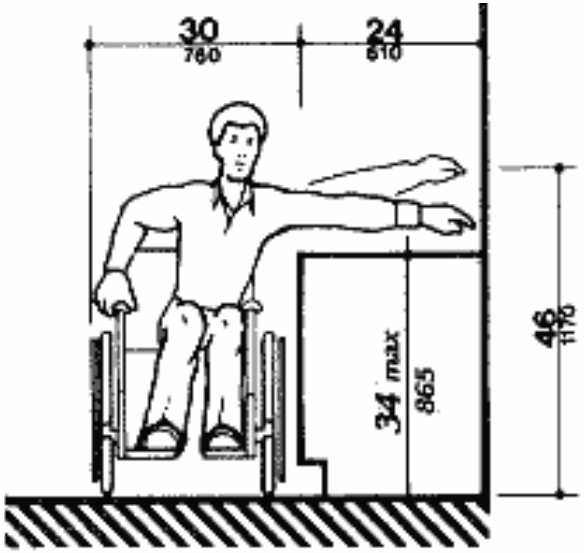

Fair Housing Act Design Manual

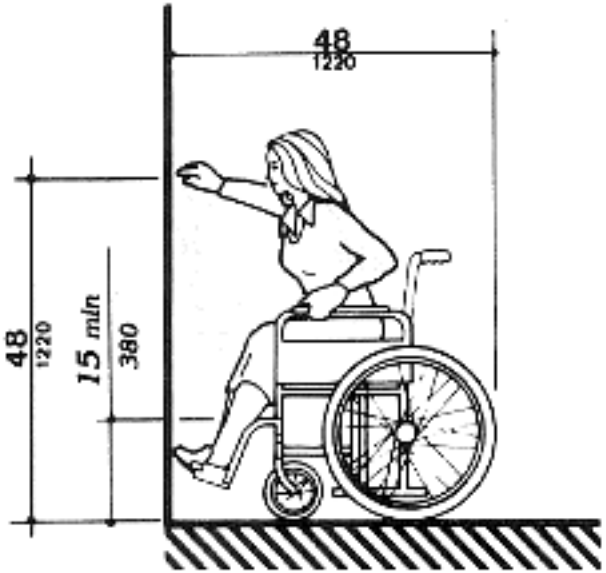

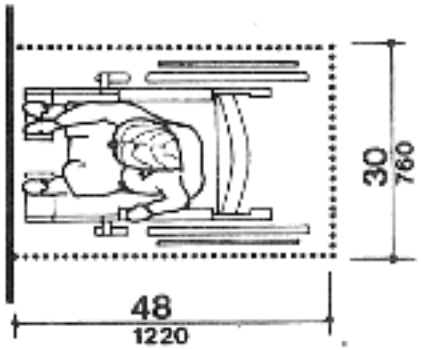

2010 ADA Standards for Accessible Design

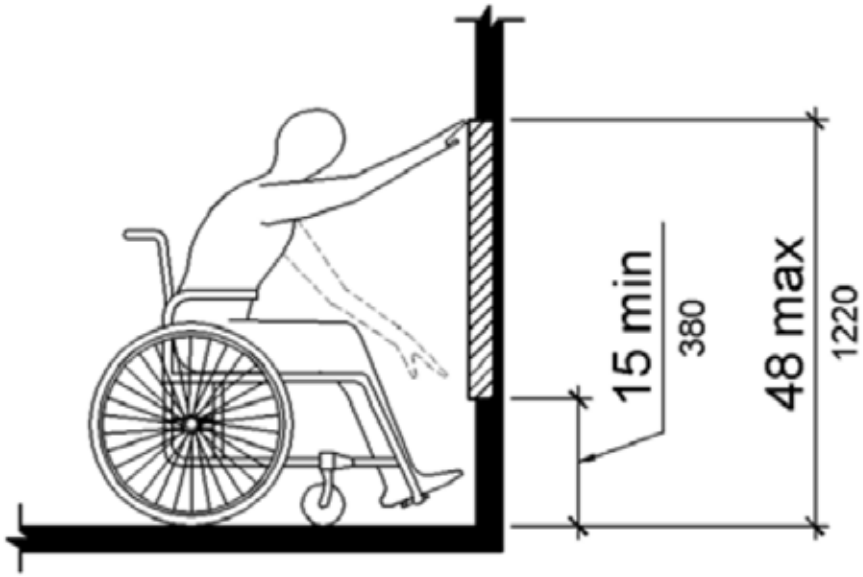

Figure 308.2.1
Unobstructed Forward Reach

Reach requirements are consistent among the three codes/standards. These requirements also coordinate with the dispensers and accessories in kitchens and bathrooms.

Section 12:
Elevators and Chair Lifts

The utilization of elevators and chair lifts has greatly improved access for people with disabilities. This section of the reference manual provides details, standards, and illustrations that provide guidance in their design to ensure accessibility.

Building professionals should be familiar with the standards for these accessibility devices, particularly the different configurations detailed and illustrated in this manual. In reviewing building plans, drawing details should provide adequate information for the inspector or plan reviewer to make a well informed decision in his/her comments and instructions.

In designing a site which may only have one elevator serving it—when possible—an alternative accessory, accessible route should be explored to avoid interruptions in service. Often services or information can be temporarily relocated during a repair process.

Comparison of ICC, Fair Housing, and ADA Standards

Elevator and Chair Lifts (Residential And Limited Use)	ICC A117.1-2009	Pages	Fair Housing Act Design Manual	Pages	2010 ADA Standards for Accessible Design	Section	Comments
Size Requirements	Elevator cars shall provide a clear floor area 36 inches (915 mm) minimum in width and 48 inches (1220 mm) minimum in depth.	26, 37	Not Specified	NA	Elevators shall comply with 407 and with ASME A17.1 (incorporated by reference, see "Referenced Standards" in Chapter 1). They shall be passenger elevators as classified by ASME A17.1. Elevator operation shall be automatic.	407.4.1	**The codes agree on all standards. The graphic illustrations also appear very similar.**
Door Opening and Closing Speeds	The reopening device shall remain effective for 20 seconds minimum.	29	Not Specified	NA	Elevator doors shall be provided with a reopening device complying with 407.3.3 that shall stop and reopen a car door and hoistway door automatically if the door becomes obstructed by an object or person.	407.3.3.3, 407.4	**The codes agree on all standards. The graphic illustrations also appear very similar.**
Control Reach Requirements	Call buttons and keypads shall be located within one of the reach ranges specified in Section 308, measured to the centerline of the highest operable part.	26, 37	Not Specified	NA	Where elevator call buttons or keypads are provided, they shall comply with 407.2.1 and 309.4. Call buttons shall be raised or flush.	308	**The codes agree on all standards. The graphic illustrations also appear very similar.**

ICC A117.1-2009

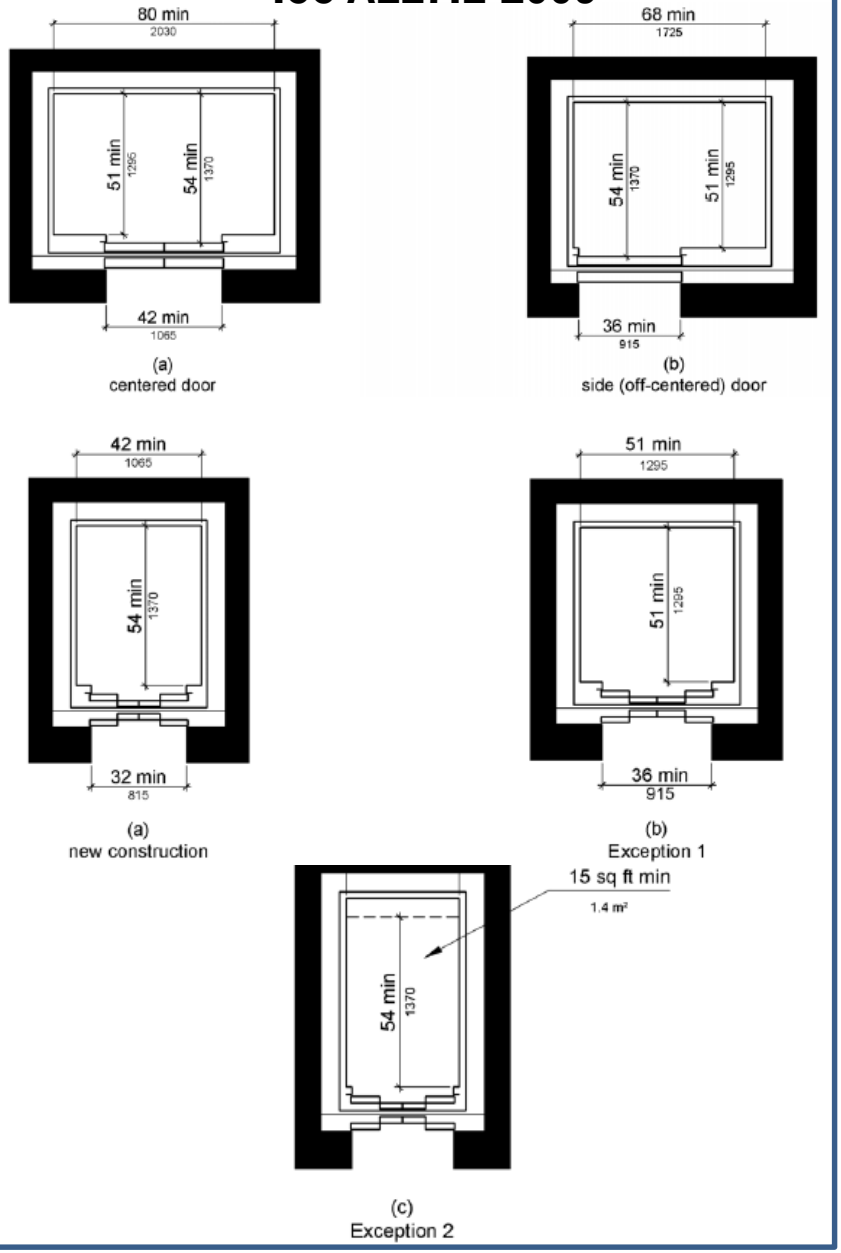

Fair Housing Act Design Manual

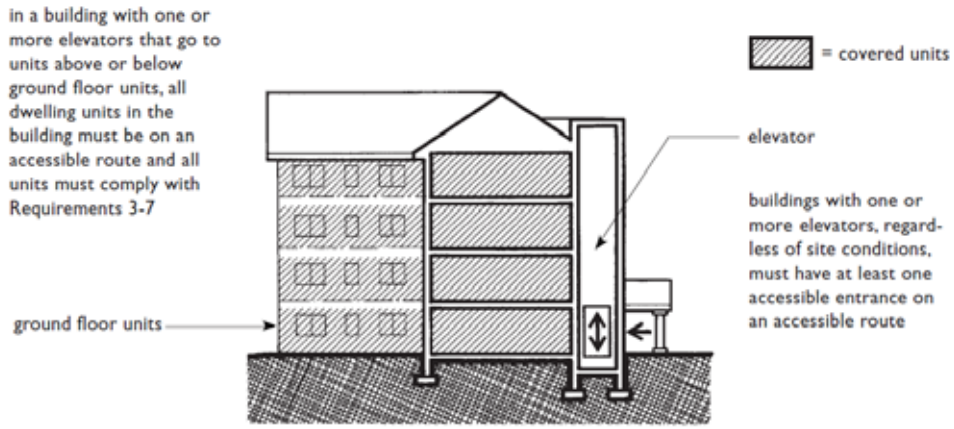

In Buildings with One or More Elevators: (Elevator Buildings) All Units are Covered

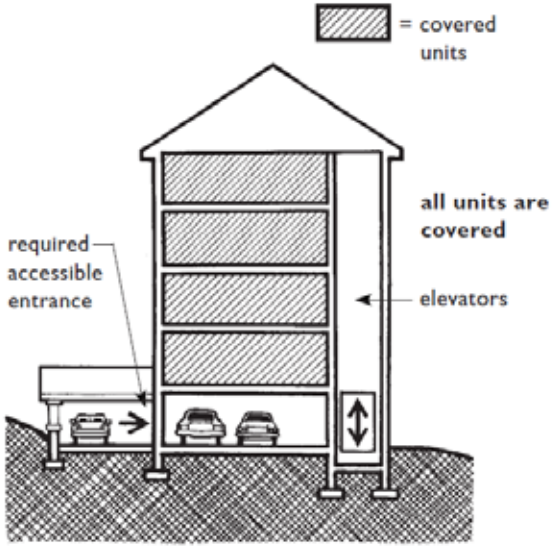

Elevators Must Provide Access to All Dwelling Units in Elevator Buildings

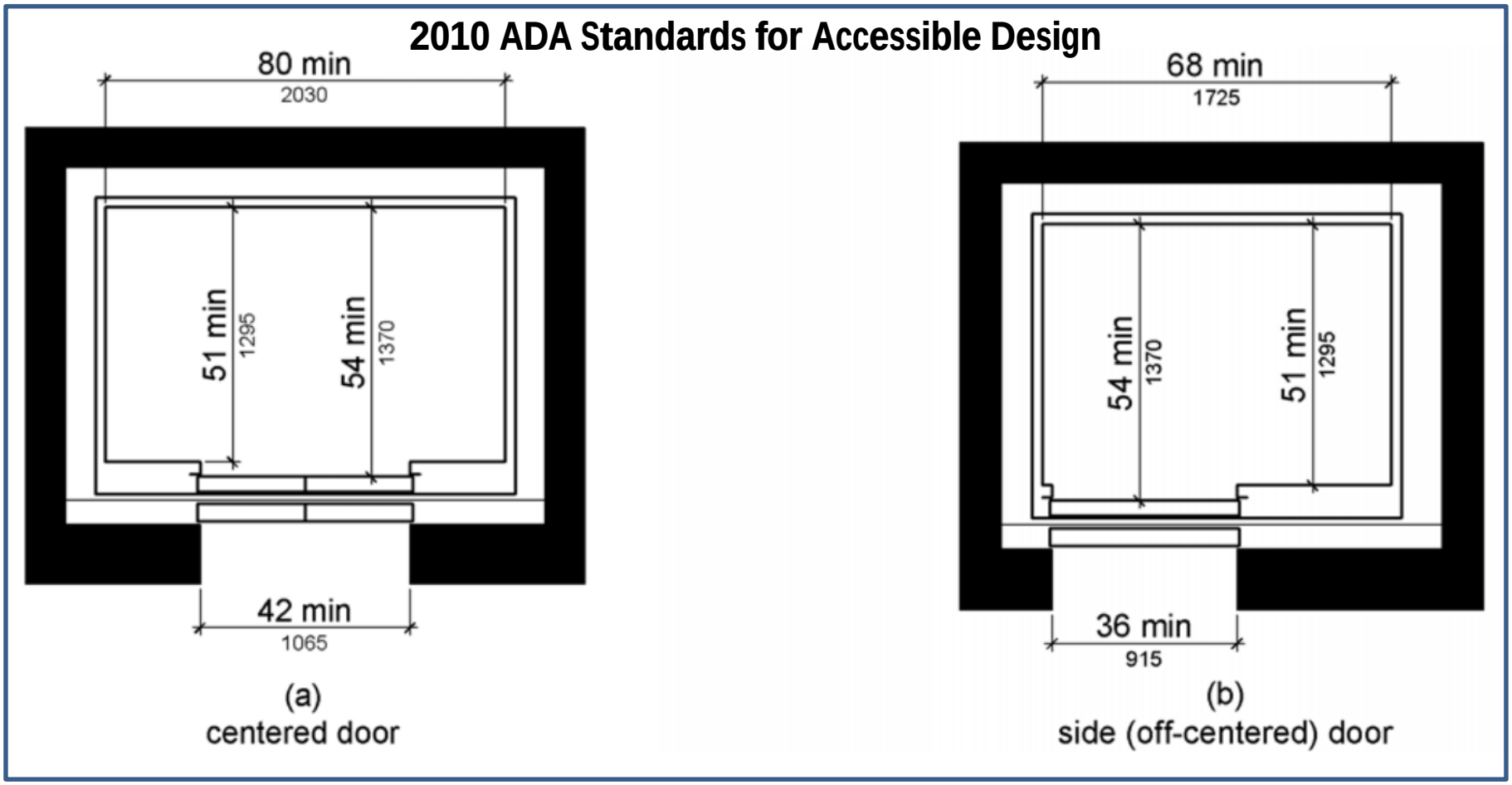

The three codes/standards agree on the size requirements of car compartment and door openings.

ICC A117.1-2009

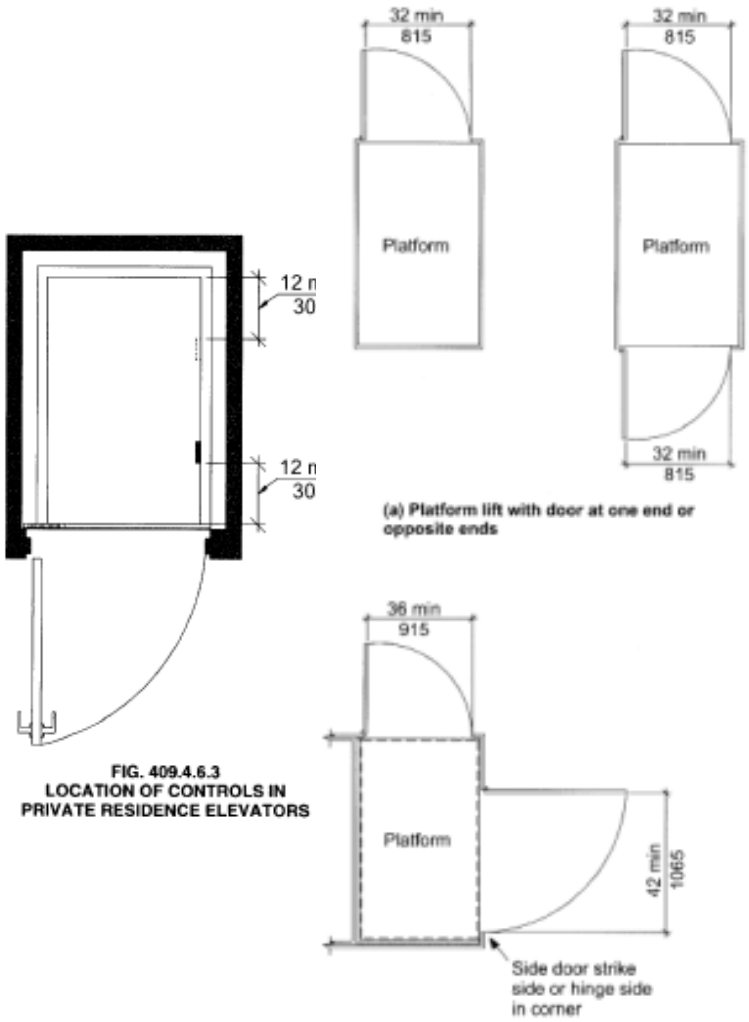

FIG. 409.4.6.3
LOCATION OF CONTROLS IN PRIVATE RESIDENCE ELEVATORS

FIG. 410.2.1
PLATFORM LIFT DOORS AND GATES

Fair Housing Act Design Manual

The Fair Housing guidelines rely on the specifications outlined in the ICC and ADA standards.

2010 ADA Standards for Accessible Design

Car door opening speed shall be no more than 1.0 feet per second with door reversal dimension travel no more than 2-1/2 inches.

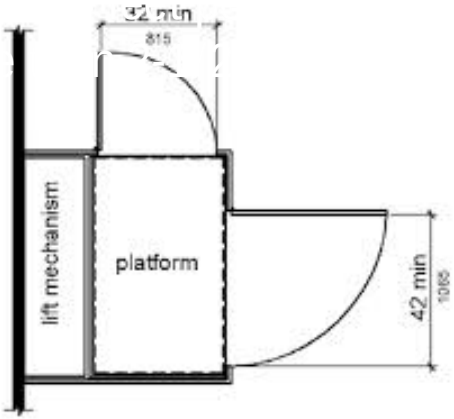

The three standards agree on the speed of door openings.

ICC A117.1-2009

EXCEPTION: Existing call buttons and existing keypads shall be permitted to be located 54 inches (1370 mm) maximum above the floor, measured to the centerline of the highest operable part.

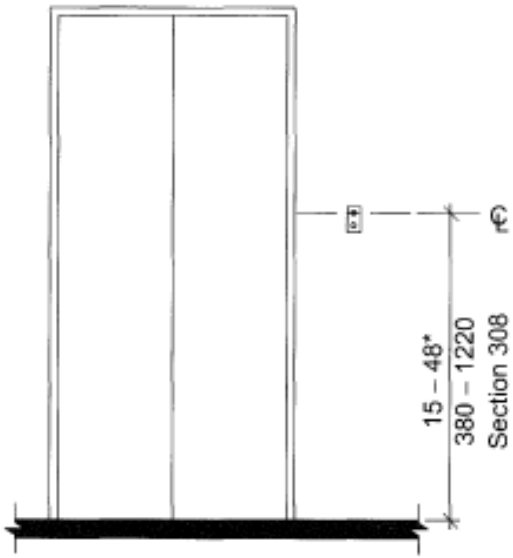

*54 max (1370) for existing

FIG. 407.2.1.1
HEIGHT OF ELEVATOR CALL BUTTONS

407.2.1.2 Size. Call buttons shall be $^3/_4$ inch (19 mm) minimum in the smallest dimension.

EXCEPTION: Existing elevator call buttons shall not be required to comply with Section 407.2.1.2.

407.2.1.3 Clear Floor Space. A clear floor space complying with Section 305 shall be provided at call controls.

COMPLIANT HEIGHT OF
42" TO CENTER

Too High

Fair Housing Act Design Manual

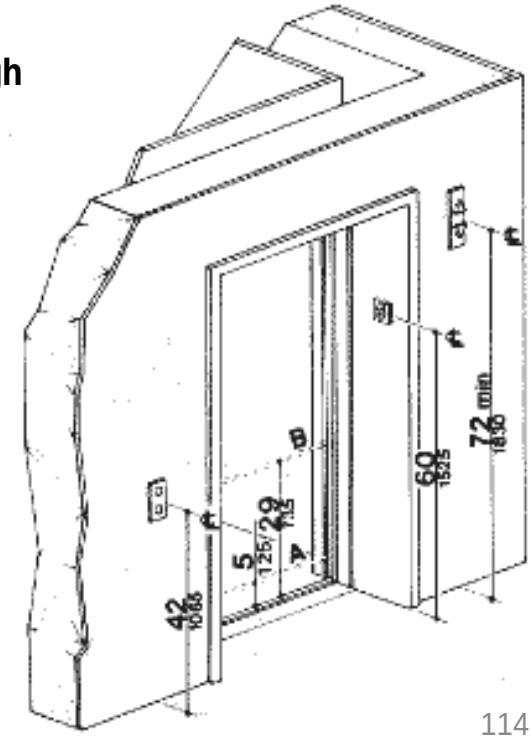

2010 ADA Standards for Accessible Design

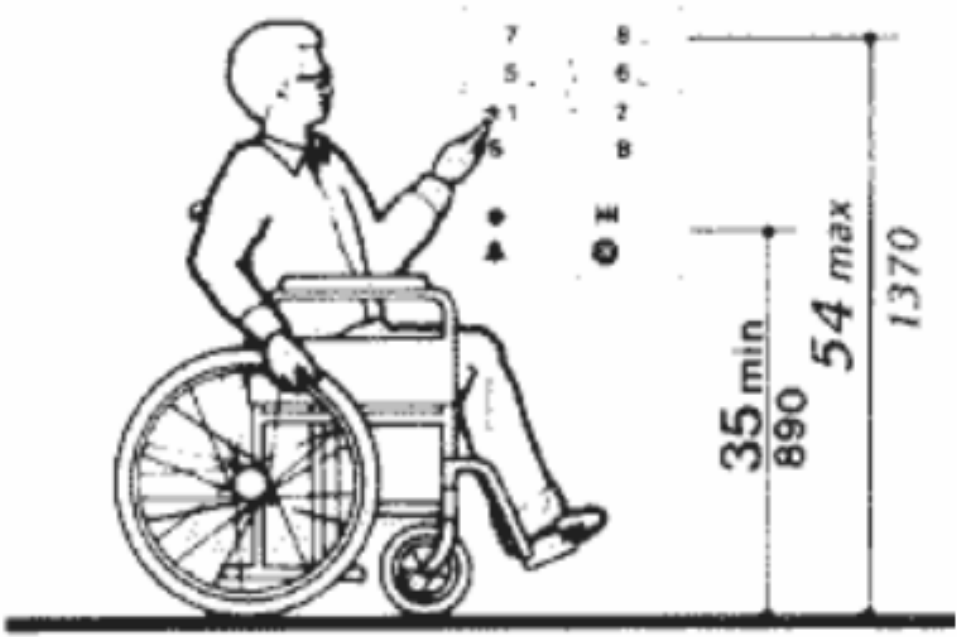

The elevator dimensions and design are consistent among the three standards reviewed. The recent use of chair lifts provides an additional accessible option that may prove useful in certain situations.

Appendix

This section includes summary charts for each of the reviewed topics and includes website addresses and comments.

Comparison of ICC, Fair Housing, and ADA Standards

Bathroom & Toilets	ICC 2012	Pages	Fair Housing Standards	Pages	2010 ADA Accessibility Standards	Section	Comments
Commode Location	https://law.resource.org/pub/us/code/ibr/ansi.a117.1.2009.pdf	46	http://www.huduser.org/publications/PDF/FAIRHOUSING/fairfull.pdf	7.43-7.48	http://www.ada.gov/regs2010/2010ADAStandards/2010ADAstandards.htm	213, 604, 806.2.4, 807, 809.4	Basically the standards are the same. The Fair Housing publication address different bathroom configurations.
Grab Bars	https://law.resource.org/pub/us/code/ibr/ansi.a117.1.2009.pdf	47	http://www.huduser.org/publications/PDF/FAIRHOUSING/fairfull.pdf	6.6 - 6.16	http://www.ada.gov/regs2010/2010ADAStandards/2010ADAstandards.htm	609	There is very little difference in the regulations.
Dispensers and Accessories	https://law.resource.org/pub/us/code/ibr/ansi.a117.1.2009.pdf	48	http://www.huduser.org/publications/PDF/FAIRHOUSING/fairfull.pdf	2.26	http://www.ada.gov/regs2010/2010ADAStandards/2010ADAstandards.htm	213.2	The codes agree on reach requirements, but the 2010 regulations use age criteria.
Bathtubs & Showers	https://law.resource.org/pub/us/code/ibr/ansi.a117.1.2009.pdf	54	http://www.huduser.org/publications/PDF/FAIRHOUSING/fairfull.pdf	7.32 - 7.83	http://www.ada.gov/regs2010/2010ADAStandards/2010ADAstandards.htm	607, 608	Basic ranges remain consistent. The Fair Housing Publication is based on ANSI, which is the IBC standard.
Accessible Routes	**ICC 2012**	**Pages**	**Fair Housing Standards**	**Pages**	**2010 ADA Accessibility Standards**	**Section**	**Comments**
Proper Signage Identifying Route Location	https://law.resource.org/pub/us/code/ibr/ansi.a117.1.2009.pdf	65-86	NA	NA	NA	NA	Very little guidance on proper signage for accessible routes is provided.
Proper Width and Slope	https://law.resource.org/pub/us/code/ibr/ansi.a117.1.2009.pdf	15	http://www.huduser.org/publications/PDF/FAIRHOUSING/fairfull.pdf	1.8 - 1.58	http://www.ada.gov/regs2010/2010ADAStandards/2010ADAstandards.htm	402	Standards are basically the same.
Surface Requirements	https://law.resource.org/pub/us/code/ibr/ansi.a117.1.2009.pdf	15	NA	NA	http://www.ada.gov/regs2010/2010ADAStandards/2010ADAstandards.htm	302.1	All requirements call for surfaces to be stable, firm, and slip resistant,
Ramps	**ICC 2012**	**Pages**	**Fair Housing Standards**	**Pages**	**2010 ADA Accessibility Standards**	**Section**	**Comments**
Slope & Surface	https://law.resource.org/pub/us/code/ibr/ansi.a117.1.2009.pdf	22	http://www.huduser.org/publications/PDF/FAIRHOUSING/fairfull.pdf	1.56 -2.5	http://www.ada.gov/regs2010/2010ADAStandards/2010ADAstandards.htm	405	All standards agree on slope and surfaces. A ramp is defined as having a running slope of over 1/20.
Railings	https://law.resource.org/pub/us/code/ibr/ansi.a117.1.2009.pdf	22	http://www.huduser.org/publications/PDF/FAIRHOUSING/fairfull.pdf	1.7 - 2.16	http://www.ada.gov/regs2010/2010ADAStandards/2010ADAstandards.htm	405.8, 405.9	The three codes agree with the Fair Housing Publication referring to the ANSI standards.
Landings	https://law.resource.org/pub/us/code/ibr/ansi.a117.1.2009.pdf	22	http://www.huduser.org/publications/PDF/FAIRHOUSING/fairfull.pdf	3.11 - 4.11	http://www.ada.gov/regs2010/2010ADAStandards/2010ADAstandards.htm	405.7-405.7.5	Requirements are the same.

Comparison of ICC, Fair Housing, and ADA Standards

Curb Ramps	ICC 2012	Pages	Fair Housing Standards	Pages	2010 ADA Accessibility Standards	Section	Comments
Location	https://law.resource.org/pub/us/code/ibr/ansi.a117.1.2009.pdf	24	http://www.huduser.org/publications/PDF/FAIRHOUSING/fairfull.pdf	1.16	http://www.ada.gov/regs2010/2010ADAStandards/2010ADAstandards.htm	406.5	No distinction between the three standards, but in the PROWAG, perpendicular curb ramps are required unless constraints prevent.
Slope	https://law.resource.org/pub/us/code/ibr/ansi.a117.1.2009.pdf	24	http://www.huduser.org/publications/PDF/FAIRHOUSING/fairfull.pdf	2.20 - 2.21	http://www.ada.gov/regs2010/2010ADAStandards/2010ADAstandards.htm	406.5	Requirements are the same.
Truncated Domes	https://law.resource.org/pub/us/code/ibr/ansi.a117.1.2009.pdf	26	http://www.huduser.org/publications/PDF/FAIRHOUSING/fairfull.pdf	2.13	http://www.ada.gov/regs2010/2010ADAStandards/2010ADAstandards.htm	705	The Fair Housing Publication refers to ANSI domes. The 2010 regulations are more specific in the standards.
Doors	**ICC 2012**	**Pages**	**Fair Housing Standards**	**Pages**	**2010 ADA Accessibility Standards**	**Section**	**Comments**
Types of Doors for Different Circumstances	https://law.resource.org/pub/us/code/ibr/ansi.a117.1.2009.pdf	15, 16	http://www.huduser.org/publications/PDF/FAIRHOUSING/fairfull.pdf	3.10 - 3.15	http://www.ada.gov/regs2010/2010ADAStandards/2010ADAstandards.htm	404.2.3	No significant difference between the three standards.
Width of Doors and Thresholds	https://law.resource.org/pub/us/code/ibr/ansi.a117.1.2009.pdf	15, 16	http://www.huduser.org/publications/PDF/FAIRHOUSING/fairfull.pdf	3.10 - 3.15	http://www.ada.gov/regs2010/2010ADAStandards/2010ADAstandards.htm	404.2.5	No significant difference between the three standards.
Maneuvering Room	https://law.resource.org/pub/us/code/ibr/ansi.a117.1.2009.pdf	17	http://www.huduser.org/publications/PDF/FAIRHOUSING/fairfull.pdf	3.10 - 3.15	http://www.ada.gov/regs2010/2010ADAStandards/2010ADAstandards.htm	404.2.4	No significant difference between the three standards.
Door Handles	https://law.resource.org/pub/us/code/ibr/ansi.a117.1.2009.pdf	19	http://www.huduser.org/publications/PDF/FAIRHOUSING/fairfull.pdf	3.10 - 3.15	http://www.ada.gov/regs2010/2010ADAStandards/2010ADAstandards.htm	309.4	All standards use similar language.
Accessible Parking	**ICC 2012**	**Pages**	**Fair Housing Standards**	**Pages**	**2010 ADA Accessibility Standards**	**Section**	**Comments**
Number and Location of Spaces	https://law.resource.org/pub/us/code/ibr/ansi.a117.1.2009.pdf	39, 40	http://www.huduser.org/publications/PDF/FAIRHOUSING/fairfull.pdf	2.25	http://www.ada.gov/regs2010/2010ADAStandards/2010ADAstandards.htm	208	Numbers have no significant changes. Fair Housing requires 3%. 2010 ADA requires more for non-residential.
Configuation of Spaces	https://law.resource.org/pub/us/code/ibr/ansi.a117.1.2009.pdf	39, 40	http://www.huduser.org/publications/PDF/FAIRHOUSING/fairfull.pdf	2.23	http://www.ada.gov/regs2010/2010ADAStandards/2010ADAstandards.htm	502	ANSI requires only a five foot access aisle. 2010 ADA standards require 132 inch van space with an exception of a 96" space with 96" aisle.
Access Aisle and Relationship to Curb Ramp (if provided)	https://law.resource.org/pub/us/code/ibr/ansi.a117.1.2009.pdf	39, 40	http://www.huduser.org/publications/PDF/FAIRHOUSING/fairfull.pdf	2.20, 2.21	http://www.ada.gov/regs2010/2010ADAStandards/2010ADAstandards.htm	502	2010 ADA parking standards require angled parking to have an access aisle on passenger side with aisle the entire length of the space.
Van Accessible Spaces	https://law.resource.org/pub/us/code/ibr/ansi.a117.1.2009.pdf	39, 40	NA	NA	http://www.ada.gov/regs2010/2010ADAStandards/2010ADAstandards.htm	208.2.4	See notes above.

Comparison of ICC, Fair Housing, and ADA Standards

Drinking Fountains	ICC 2012	Pages	Fair Housing Standards	Pages	2010 ADA Accessibility Standards	Section	Comments
Forward Reaches	NA	NA	NA	NA	http://www.ada.gov/regs2010/2010ADAStandards/2010ADAstandards.htm	602.5-602.7	The codes are consistent. The Fair Housing Publication refers to the ANSI standards.
Relationship with Accessible Route	https://law.resource.org/pub/us/code/ibr/ansi.a117.1.2009.pdf	45	http://www.huduser.org/publications/PDF/FAIRHOUSING/fairfull.pdf	2.18, 2.19	http://www.ada.gov/regs2010/2010ADAStandards/2010ADAstandards.htm	307	The text clearly shows that the accessible fountain should be located with other water fountains.
Numbers Required	https://law.resource.org/pub/us/code/ibr/ansi.a117.1.2009.pdf	45	http://www.huduser.org/publications/PDF/FAIRHOUSING/fairfull.pdf	2.13	http://www.ada.gov/regs2010/2010ADAStandards/2010ADAstandards.htm	211.2	The rules are consistent, requiring that 50 percent of the fountains be accessible. Dual fountains are preferrable where possible.
Visual Alarms	**ICC 2012**	**Pages**	**Fair Housing Standards**	**Pages**	**2010 ADA Accessibility Standards**	**Section**	**Comments**
Location and Why They are Needed	https://law.resource.org/pub/us/code/ibr/ansi.a117.1.2009.pdf	65	http://www.huduser.org/publications/PDF/FAIRHOUSING/fairfull.pdf	21, A-8	http://www.ada.gov/regs2010/2010ADAStandards/2010ADAstandards.htm	215.1, 702	Consistent standards with NFPA 72 (1999 or 2002 edition) referenced in each. Fair Housing Publication gives a good explanation.
Light Fixtures	**ICC 2012**	**Pages**	**Fair Housing Standards**	**Pages**	**2010 ADA Accessibility Standards**	**Section**	**Comments**
Types Required	https://law.resource.org/pub/us/code/ibr/ansi.a117.1.2009.pdf	91	http://www.huduser.org/publications/PDF/FAIRHOUSING/fairfull.pdf	5.1, 5.9	http://www.ada.gov/regs2010/2010ADAStandards/2010ADAstandards.htm	309	Limited information on types required is provided, but location and accessiblity are noted.
Placement of Fixtures	https://law.resource.org/pub/us/code/ibr/ansi.a117.1.2009.pdf	91, 13, 14	http://www.huduser.org/publications/PDF/FAIRHOUSING/fairfull.pdf	5.1, 5.9	http://www.ada.gov/regs2010/2010ADAStandards/2010ADAstandards.htm	205.1	The accessible reach standards are used for each code.

Comparison of ICC, Fair Housing, and ADA Standards

Kitchens	ICC 2012	Pages	Fair Housing Standards	Pages	2010 ADA Accessibility Standards	Section	Comments
Counter Tops	https://law.resource.org/pub/us/code/ibr/ansi.a117.1.2009.pdf	81, 82	http://www.huduser.org/publications/PDF/FAIRHOUSING/fairfull.pdf	7.7	http://www.ada.gov/regs2010/2010ADAStandards/2010ADAstandards.htm	226.3	The 26 minimum, 30 maximum standard is consistent through the codes with several variations for kitchen type.
Sinks	https://law.resource.org/pub/us/code/ibr/ansi.a117.1.2009.pdf	81, 82, 54	http://www.huduser.org/publications/PDF/FAIRHOUSING/fairfull.pdf	7.14	http://www.ada.gov/regs2010/2010ADAStandards/2010ADAstandards.htm	606	The codes are consistent. The Fair Housing Publication is more illustrative and offers more options for a kitchen.
Cabinets	https://law.resource.org/pub/us/code/ibr/ansi.a117.1.2009.pdf	99	http://www.huduser.org/publications/PDF/FAIRHOUSING/fairfull.pdf	7.14	http://www.ada.gov/regs2010/2010ADAStandards/2010ADAstandards.htm	225.2	The codes are consistent. The reach requirements that are detailed in each code are used.
Plumbing Fixtures	https://law.resource.org/pub/us/code/ibr/ansi.a117.1.2009.pdf	81, 82	http://www.huduser.org/publications/PDF/FAIRHOUSING/fairfull.pdf	7.2-7.30	http://www.ada.gov/regs2010/2010ADAStandards/2010ADAstandards.htm	902.1	The reach standards are used as noted below. Grasping and accessibility standards are noted.
Turning Specifications	https://law.resource.org/pub/us/code/ibr/ansi.a117.1.2009.pdf	81, 82	http://www.huduser.org/publications/PDF/FAIRHOUSING/fairfull.pdf	7.2-7.30	http://www.ada.gov/regs2010/2010ADAStandards/2010ADAstandards.htm	809.2.2	The codes are consistent with the 40-60 inch clearance used. Certain exceptions of 30 inches are mentioned in Fair Housing Publication.
Reach Ranges	**ICC 2012**	**Pages**	**Fair Housing Standards**	**Pages**	**2010 ADA Accessibility Standards**	**Section**	**Comments**
Forward Reaches	https://law.resource.org/pub/us/code/ibr/ansi.a117.1.2009.pdf	13, 14	http://www.huduser.org/publications/PDF/FAIRHOUSING/fairfull.pdf	5.3, 5.4	http://www.ada.gov/regs2010/2010ADAStandards/2010ADAstandards.htm	308.2	The reach guidelines are consistent with all three codes.
Side reaches	https://law.resource.org/pub/us/code/ibr/ansi.a117.1.2009.pdf	13, 14	http://www.huduser.org/publications/PDF/FAIRHOUSING/fairfull.pdf	5.5	http://www.ada.gov/regs2010/2010ADAStandards/2010ADAstandards.htm	308.3	The reach guidelines are consistent with all three codes.
Unobstructed High Reaches	https://law.resource.org/pub/us/code/ibr/ansi.a117.1.2009.pdf	13, 14	http://www.huduser.org/publications/PDF/FAIRHOUSING/fairfull.pdf	5.6	http://www.ada.gov/regs2010/2010ADAStandards/2010ADAstandards.htm	308.2.2	The reach guidelines are consistent with all three codes.

Comparison of ICC, Fair Housing, and ADA Standards							
Elevator and Chair Lifts (Residential And Limited Use)	**ICC 2012**	**Pages**	**Fair Housing Standards**	**Pages**	**2010 ADA Accessibility Standards**	**Section**	**Comments**
Size Requirements	https://law.resource.org/pub/us/code/ibr/ansi.a117.1.2009.pdf	26, 37	NA	NA	http://www.ada.gov/regs2010/2010ADAStandards/2010ADAstandards.htm	407.4.1	**The codes agree on all standards. The graphic illustrations also appear to be very similar.**
Door Opening and Closing Speeds	https://law.resource.org/pub/us/code/ibr/ansi.a117.1.2009.pdf	29	NA	NA	http://www.ada.gov/regs2010/2010ADAStandards/2010ADAstandards.htm	407.3.3.3, 407.4	**The codes agree on all standards. The graphic illustrations also appear to be very similar.**
Control Reach Requirements	https://law.resource.org/pub/us/code/ibr/ansi.a117.1.2009.pdf	26, 37	NA	NA	http://www.ada.gov/regs2010/2010ADAStandards/2010ADAstandards.htm	308	**The codes agree on all standards. The graphic illustrations also appear to be very similar.**